Chapter 01: Getting Ready

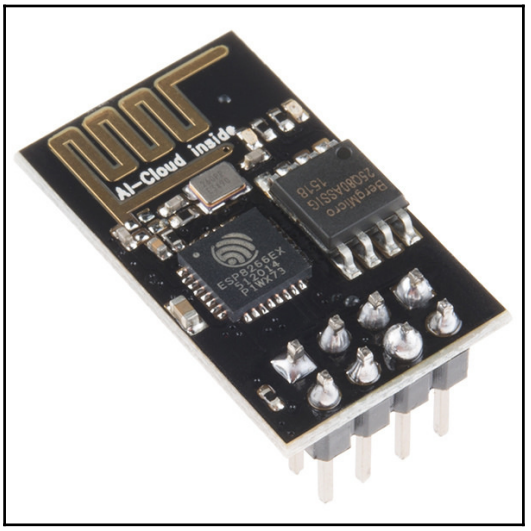

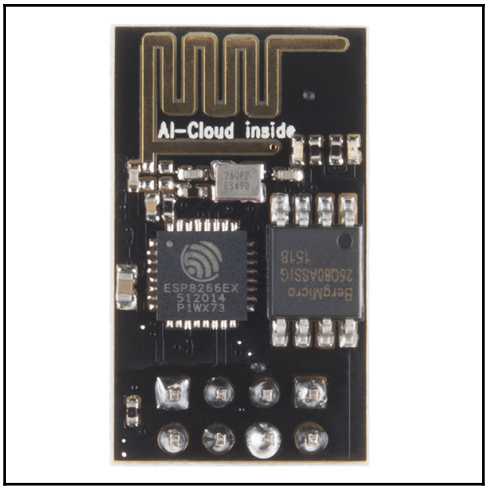
AI-Cloud inside
ESP8266EX
512014
P1WX73

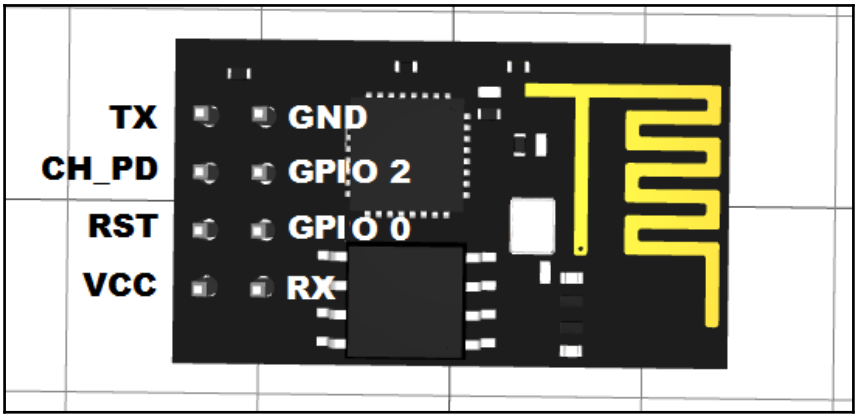
TX
CH_PD
RST
VCC
GND
GPIO 2
GPIO 0
RX

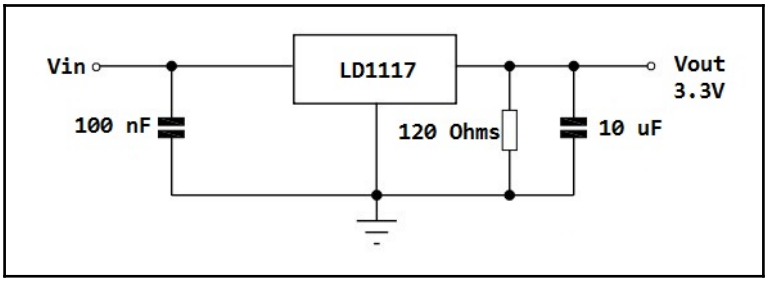
Vin
LD1117
Vout
3.3V
100 nF
120 Ohms
10 uF

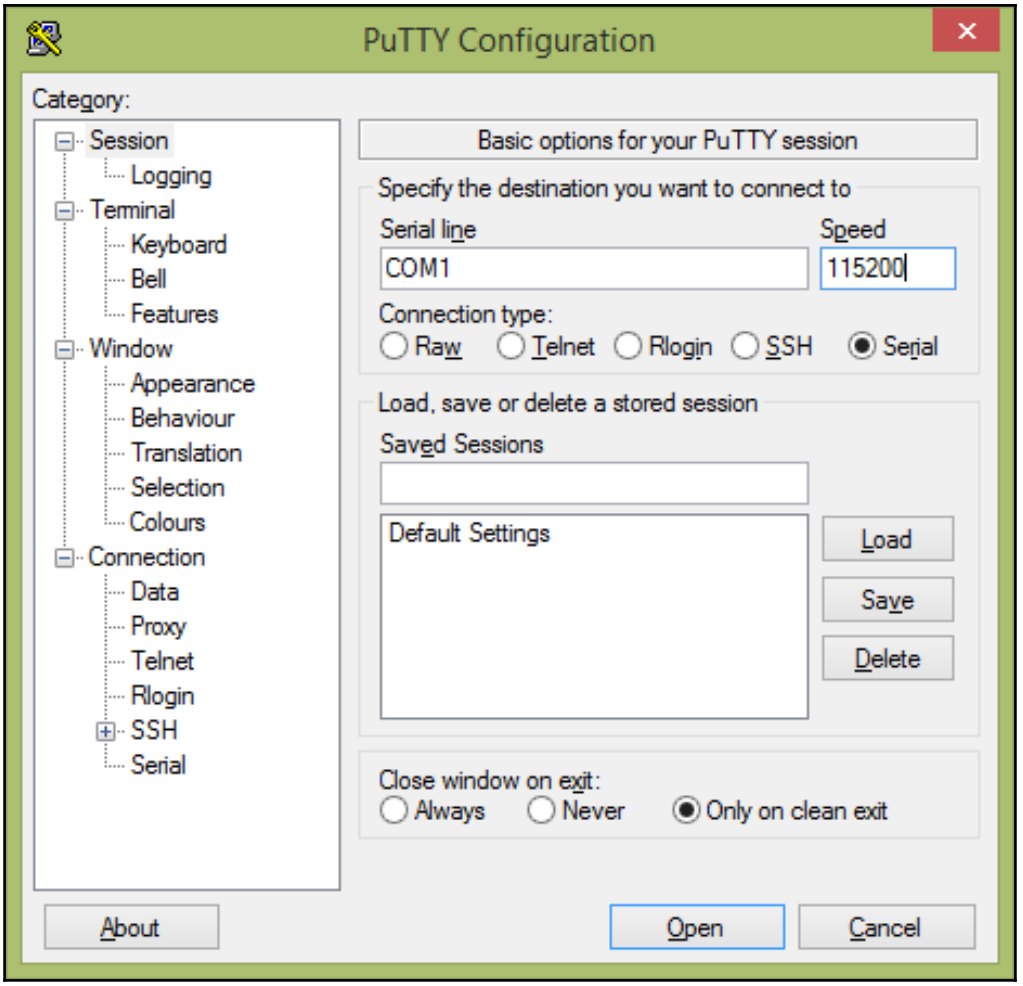
PuTTY Configuration
Category:
Session
Logging
Terminal
Keyboard
Bell
Features
Window
Appearance
Behaviour
Translation
Selection
Colours
Connection
Data
Proxy
Telnet
Rlogin
SSH
Serial
Basic options for your PuTTY session
Specify the destination you want to connect to
Serial line
Speed
COM1
115200
Connection type:
Raw
Telnet
Rlogin
SSH
Serial
Load, save or delete a stored session
Saved Sessions
Default Settings
Load
Save
Delete
Close window on exit:
Always
Never
Only on clean exit
About
Open
Cancel

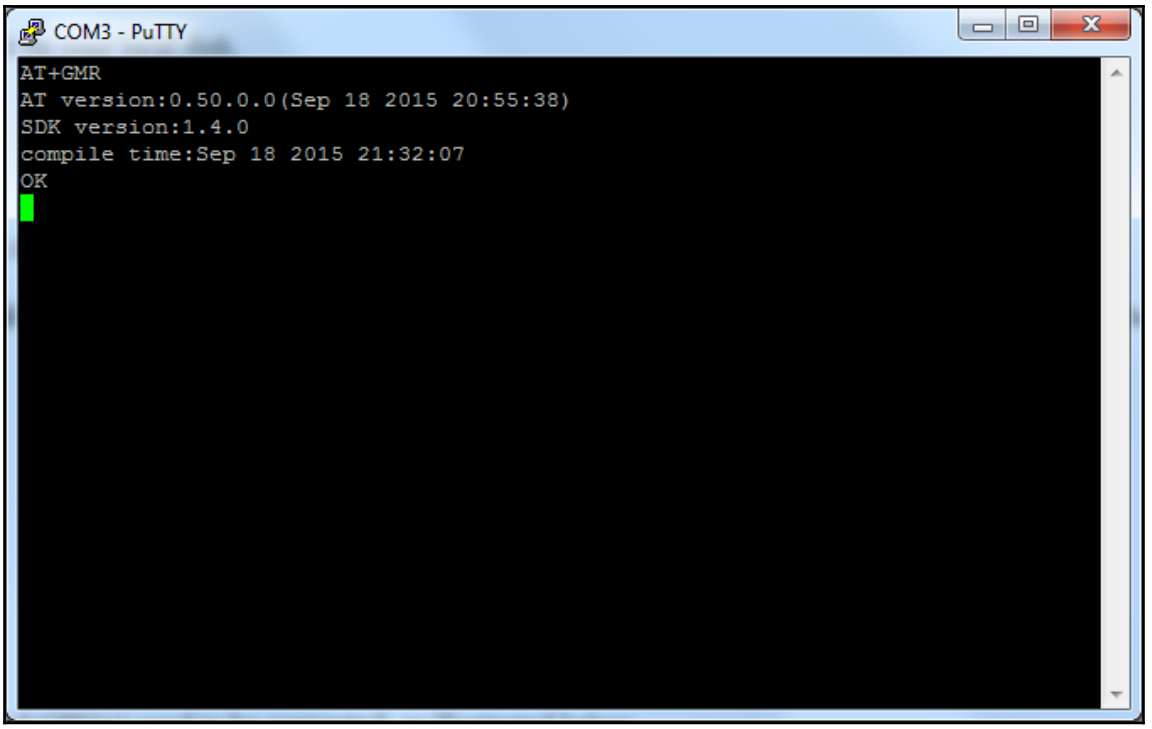
COM3 - PuTTY
AT+GMR
AT version:0.50.0.0(Sep 18 2015 20:55:38)
SDK version:1.4.0
compile time:Sep 18 2015 21:32:07
OK

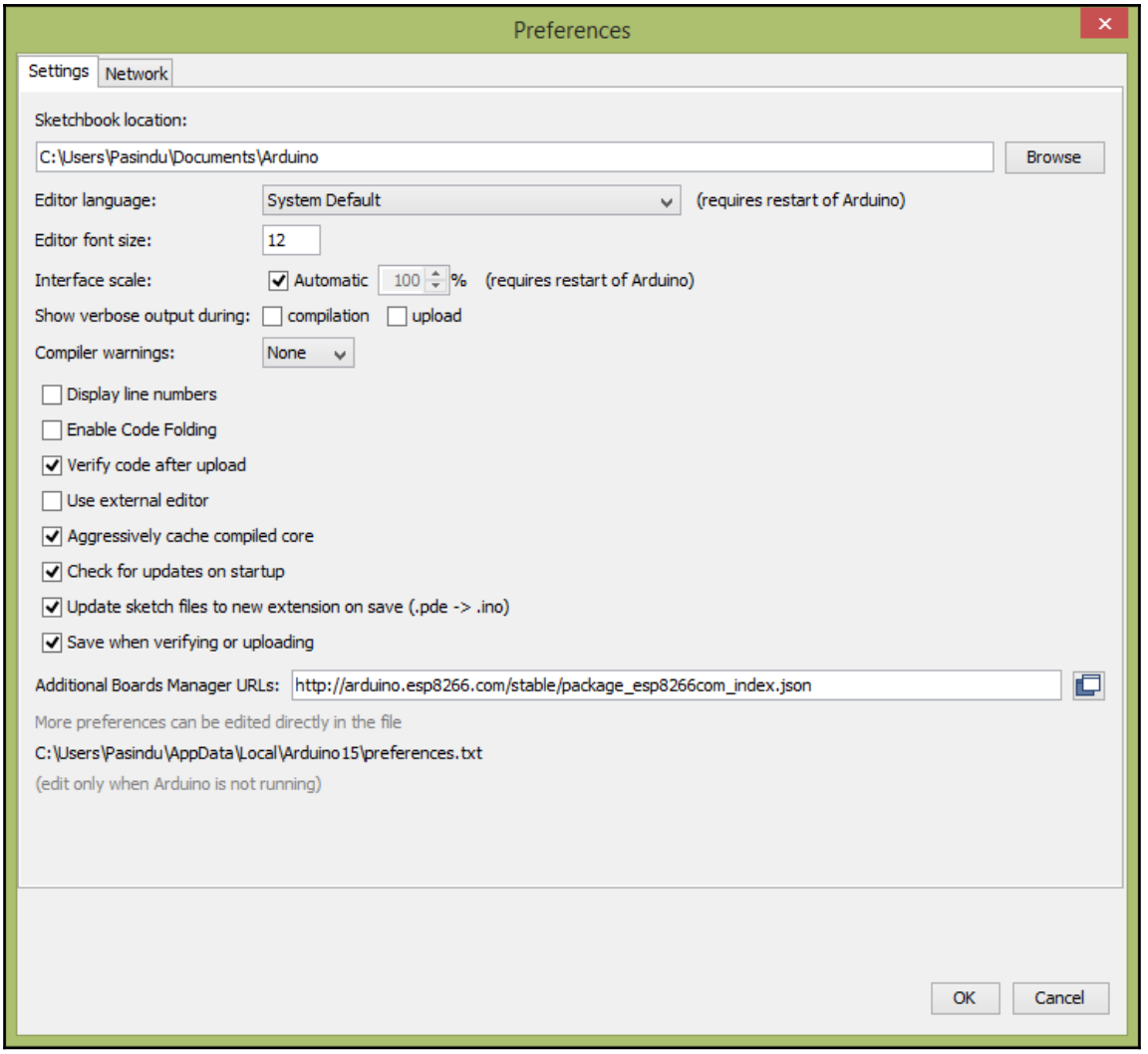
Preferences
Settings
Network
Sketchbook location:
C:\Users\Pasindu\Documents\Arduino
Browse
Editor language:
System Default
(requires restart of Arduino)
Editor font size:
12
Interface scale:
Automatic
100
%
(requires restart of Arduino)
Show verbose output during:
compilation
upload
Compiler warnings:
None
Display line numbers
Enable Code Folding
Verify code after upload
Use external editor
Aggressively cache compiled core
Check for updates on startup
Update sketch files to new extension on save (.pde -> .ino)
Save when verifying or uploading
Additional Boards Manager URLs:
http://arduino.esp8266.com/stable/package_esp8266com_index.json
More preferences can be edited directly in the file
C:\Users\Pasindu\AppData\Local\Arduino15\preferences.txt
(edit only when Arduino is not running)
OK
Cancel

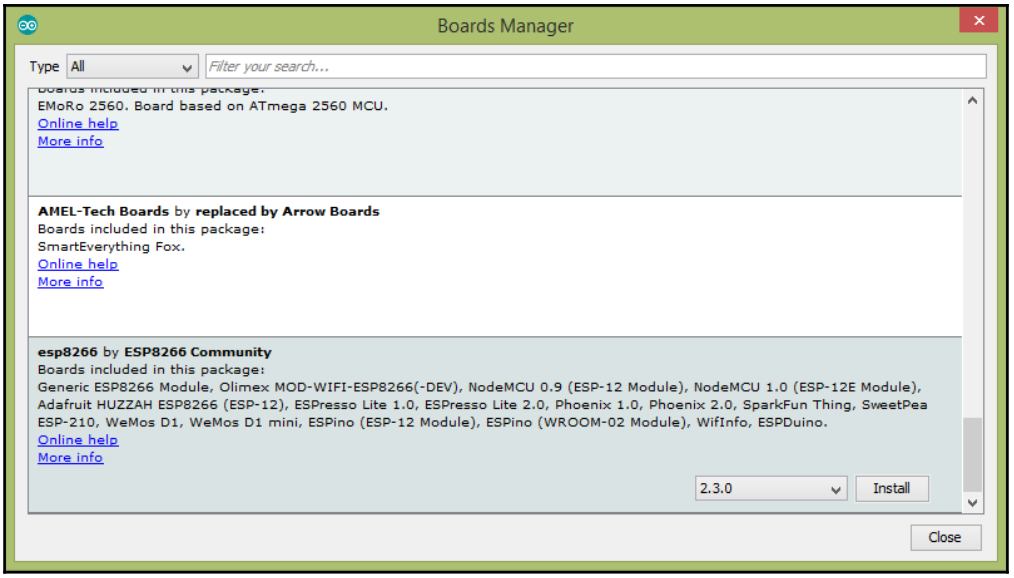
Boards Manager
Type
All
Filter your search...
EMoRo 2560. Board based on ATmega 2560 MCU.
Online help
More info
AMEL-Tech Boards by replaced by Arrow Boards
Boards included in this package:
SmartEverything Fox.
Online help
More info
esp8266 by ESP8266 Community
Boards included in this package:
Generic ESP8266 Module, Olimex MOD-WIFI-ESP8266(-DEV), NodeMCU 0.9 (ESP-12 Module), NodeMCU 1.0 (ESP-12E Module), Adafruit HUZZAH ESP8266 (ESP-12), ESPresso Lite 1.0, ESPresso Lite 2.0, Phoenix 1.0, Phoenix 2.0, SparkFun Thing, SweetPea ESP-210, WeMos D1, WeMos D1 mini, ESPino (ESP-12 Module), ESPino (WROOM-02 Module), WifInfo, ESPDuino.
Online help
More info
2.3.0
Install
Close

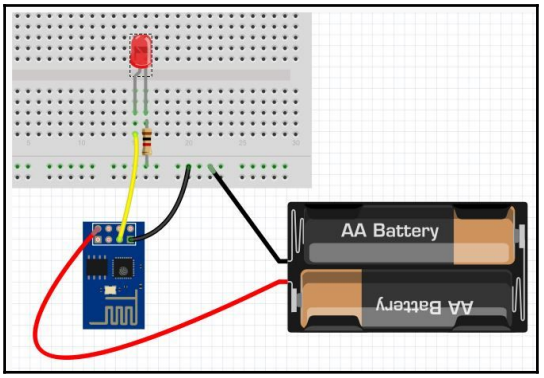
AA Battery
AA Battery

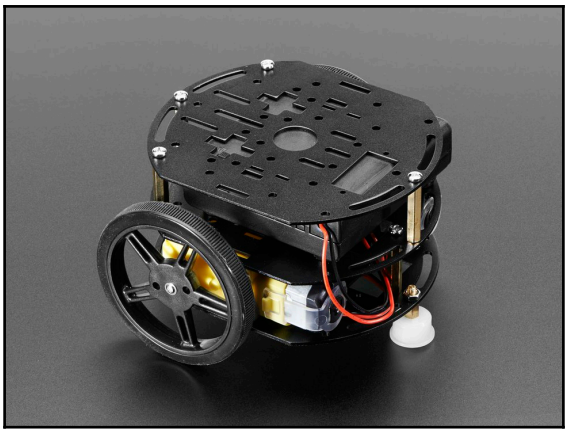

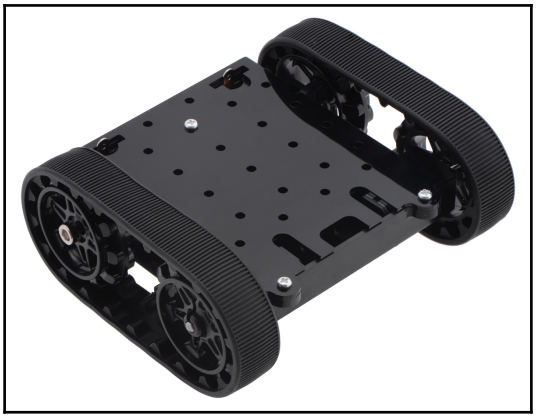

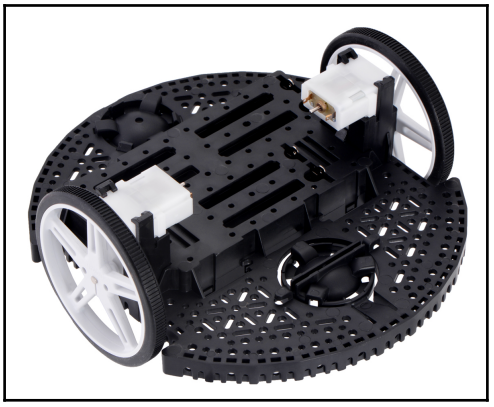

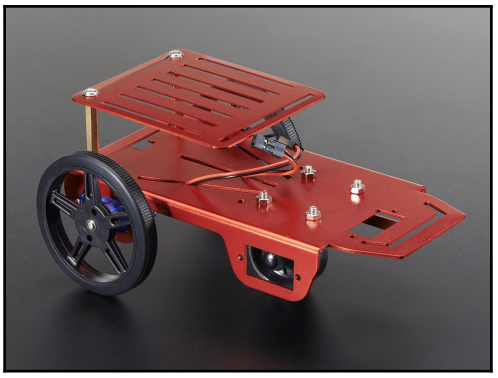

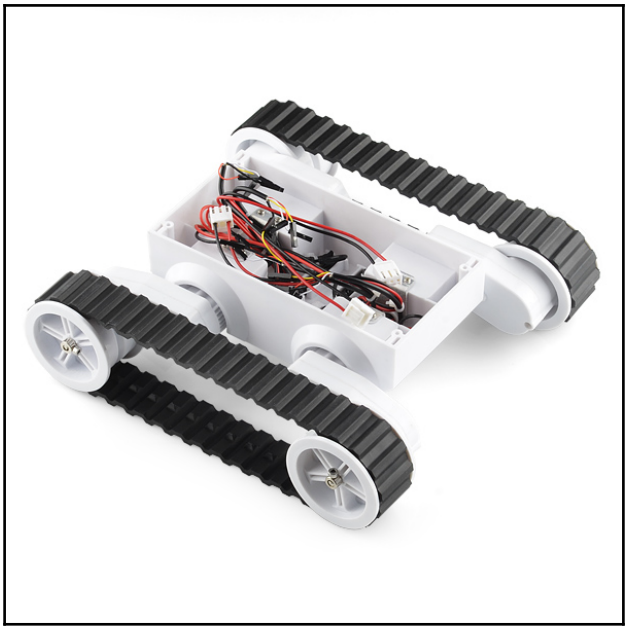

Chapter 02: Building a Mini Round Robot with Original ESP8266

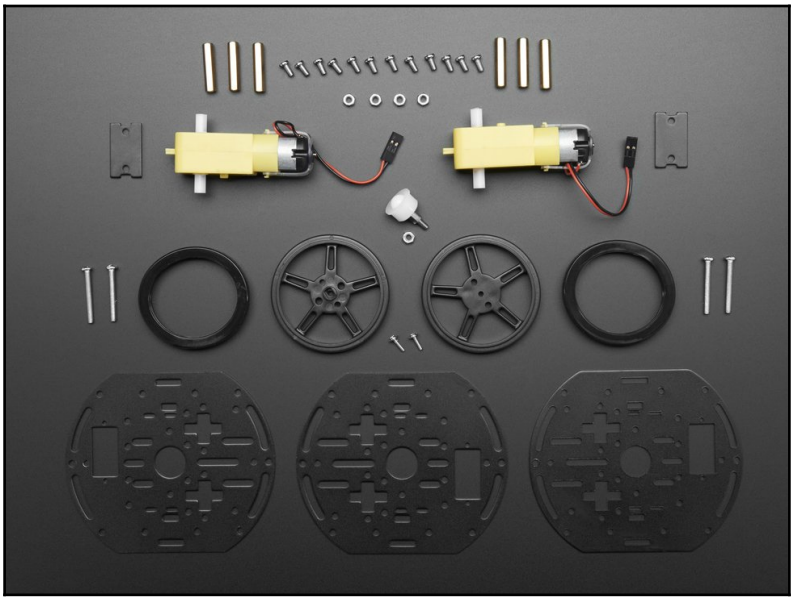

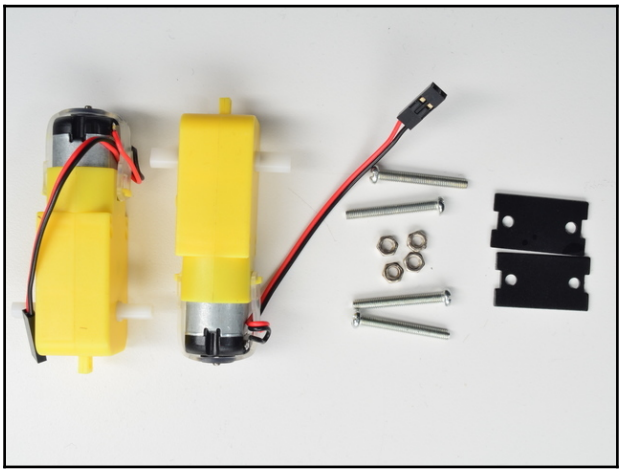

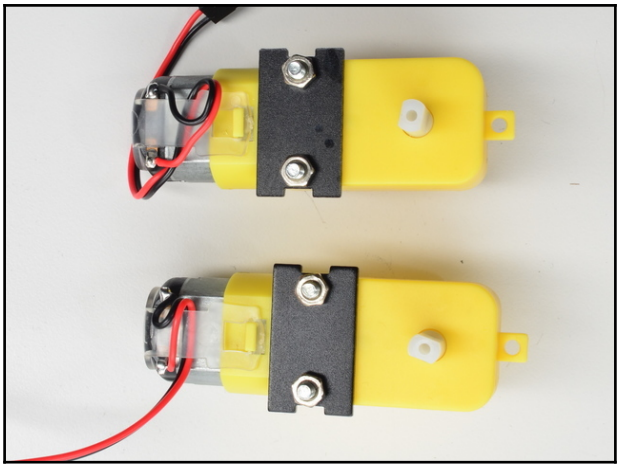

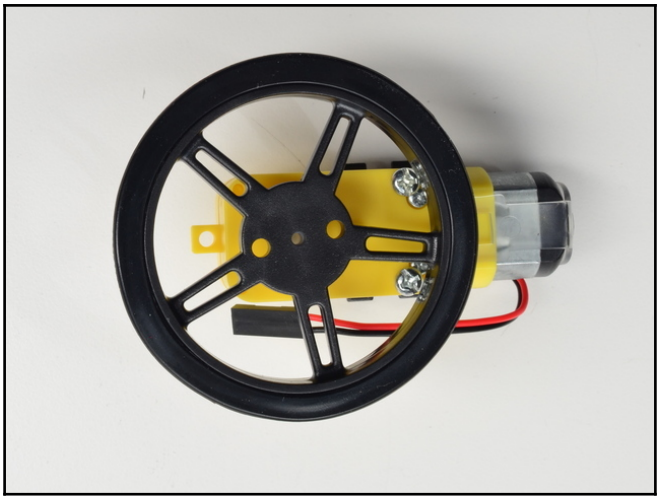

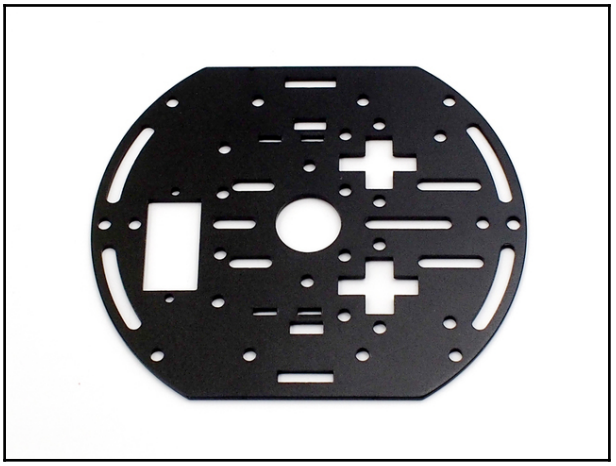

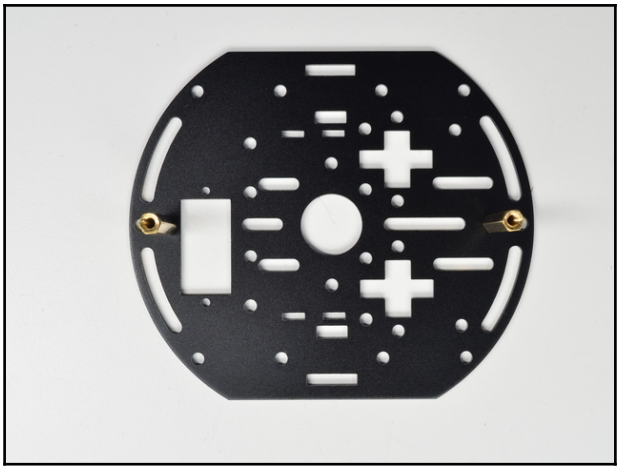

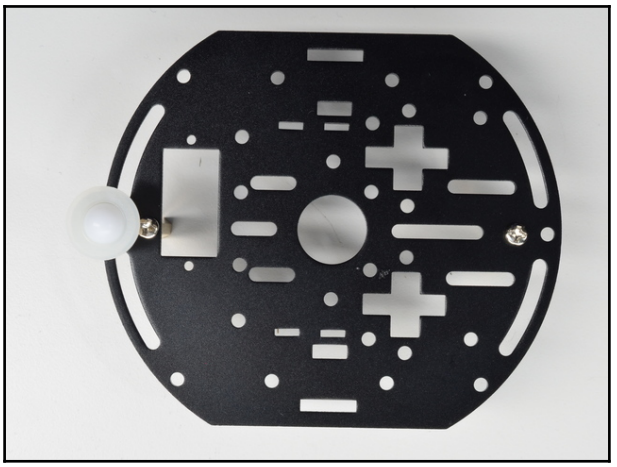

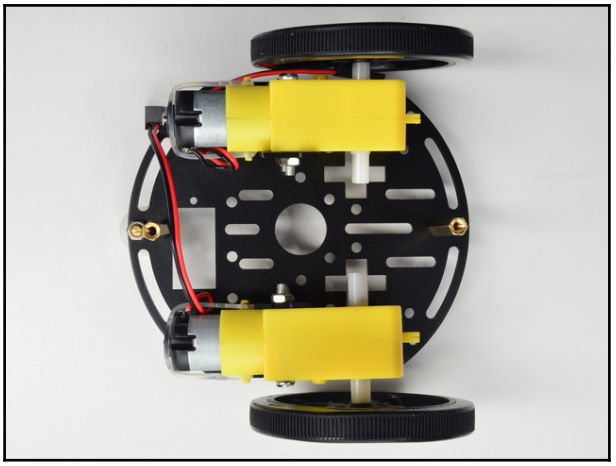

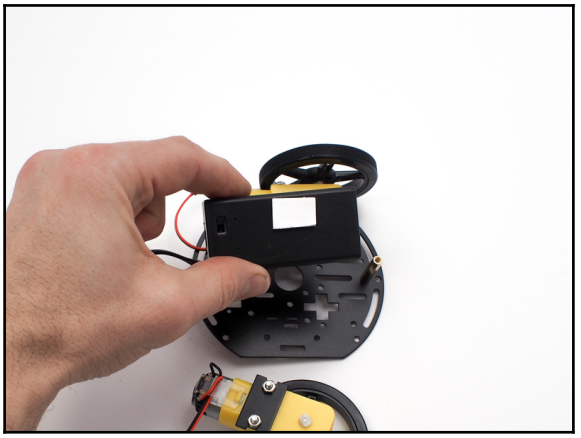

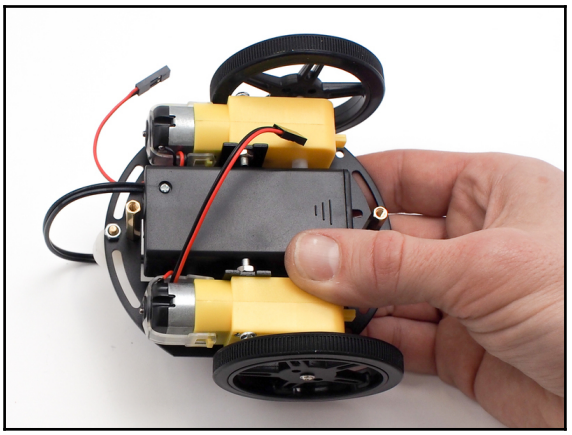

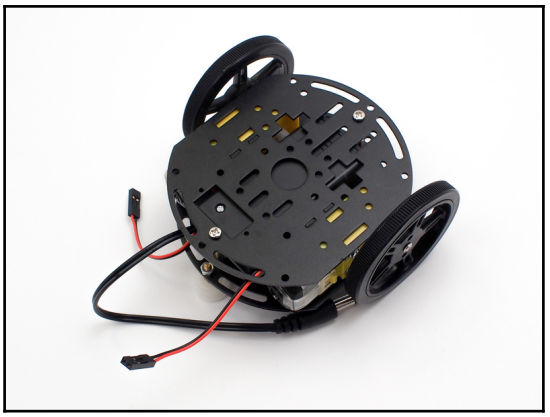

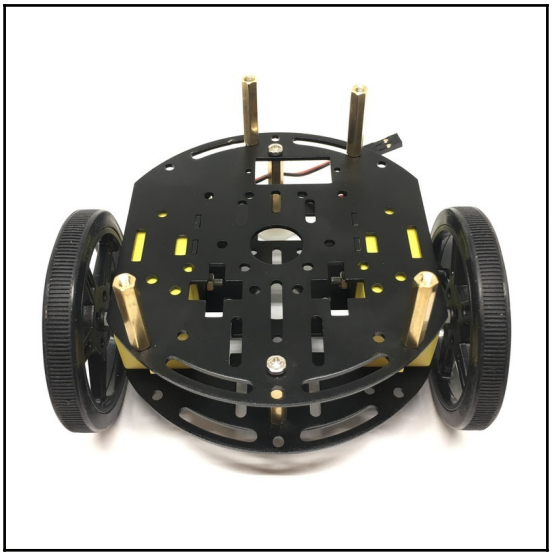


OPEN

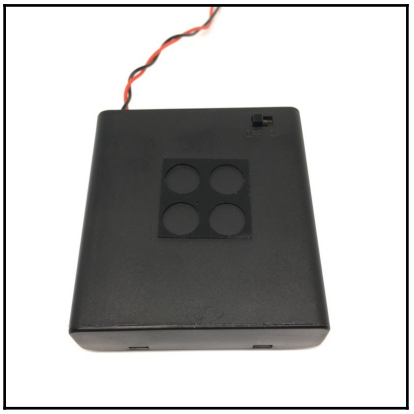

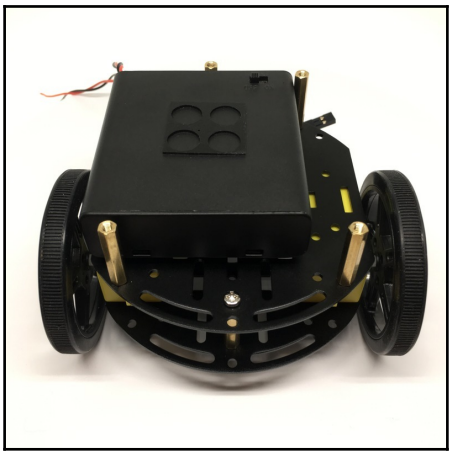

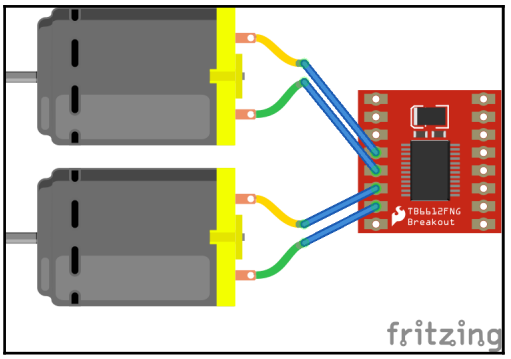
TB6612FNG
Breakout
fritzing

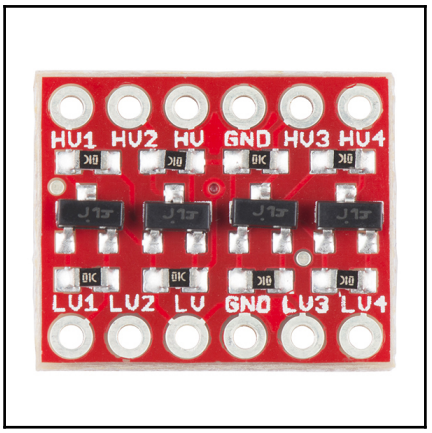
HV1 HV2 HV GND HV3 HV4
LV1 LV2 LV GND LV3 LV4

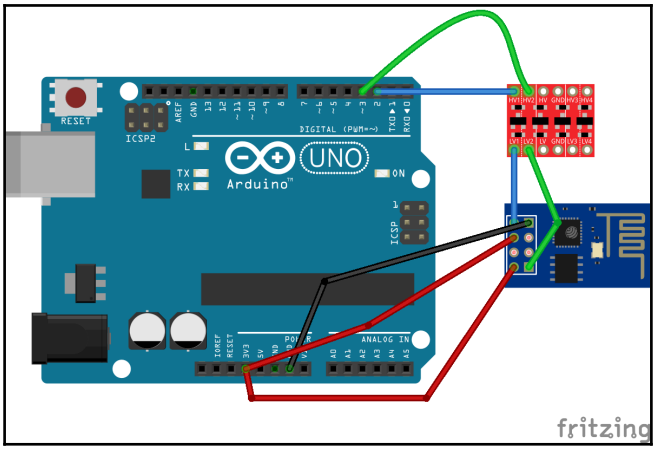
RESET
ICSP2
UNO
Arduino
DIGITAL (PWM=~)
ANALOG IN
POWER
ICSP
fritzing

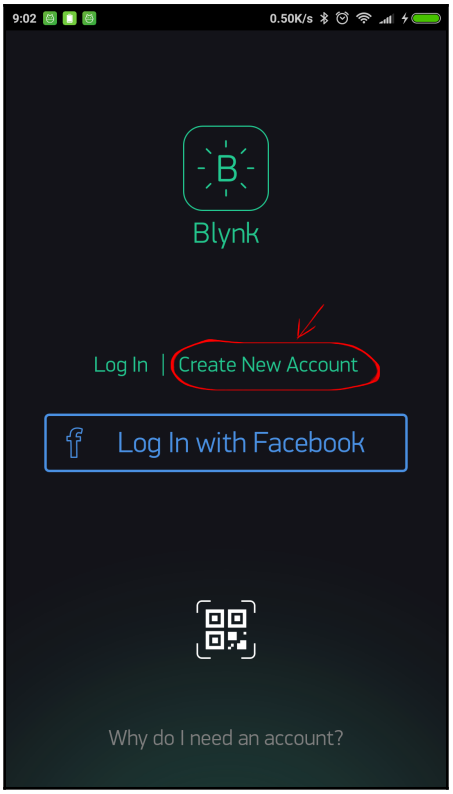
9:02
0.50K/s
Blynk
Log In
Create New Account
Log In with Facebook
Why do I need an account?

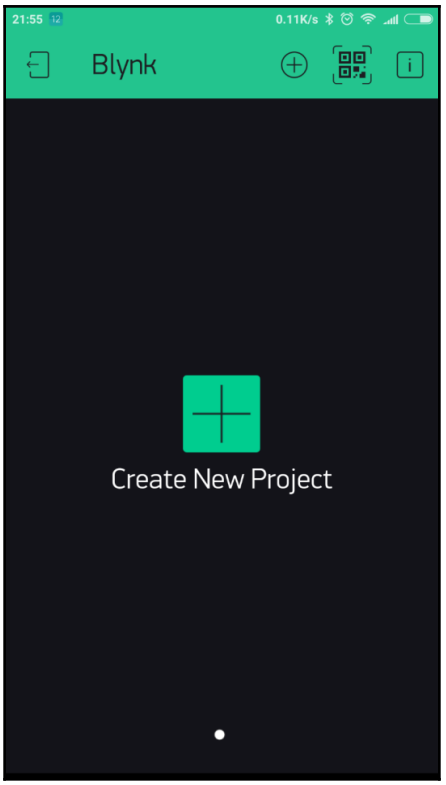
21:55
0.11K/s
Blynk
Create New Project

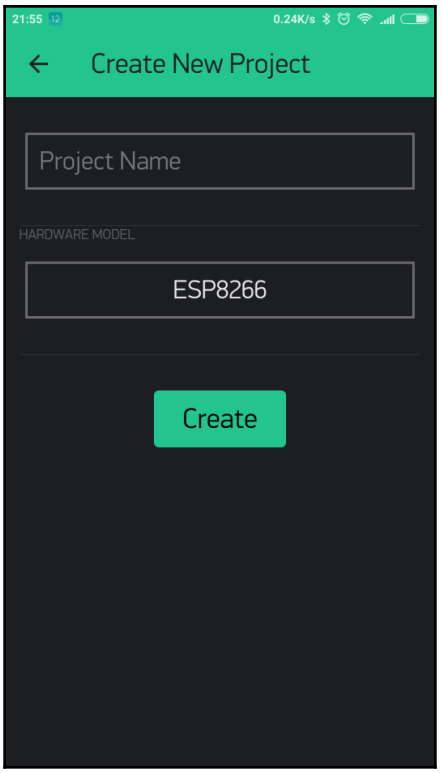
21:55
0.24K/s
Create New Project
Project Name
HARDWARE MODEL
ESP8266
Create

Auth Token for mini round robot project and device mini round robot

D

dispatcher@blynk.io

Today, 10:49 PM

You

Reply

Getting too much email from dispatcher@blynk.io? You can unsubscribe

Auth Token : da999e8ef4ac42148f9fe8427d482451

Happy Blynking!
-
Getting Started Guide -> https://www.blynk.cc/getting-started
Documentation -> http://docs.blynk.cc/
Sketch generator -> https://examples.blynk.cc/

Latest Blynk library -> https://github.com/blynkkk/blynk-library/releases/download/v0.4.8/Blynk_Release_v0.4.8.zip
Latest Blynk server -> https://github.com/blynkkk/blynk-server/releases/download/v0.25.2/server-0.25.2.jar
-
https://www.blynk.cc
twitter.com/blynk_app
www.facebook.com/blynkapp

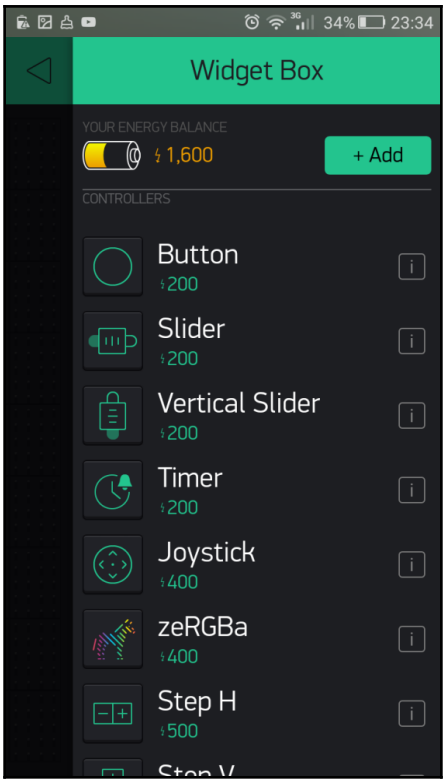
34%
23:34
Widget Box
YOUR ENERGY BALANCE
1,600
+ Add
CONTROLLERS
Button
200
Slider
200
Vertical Slider
200
Timer
200
Joystick
400
zeRGBa
400
Step H
500

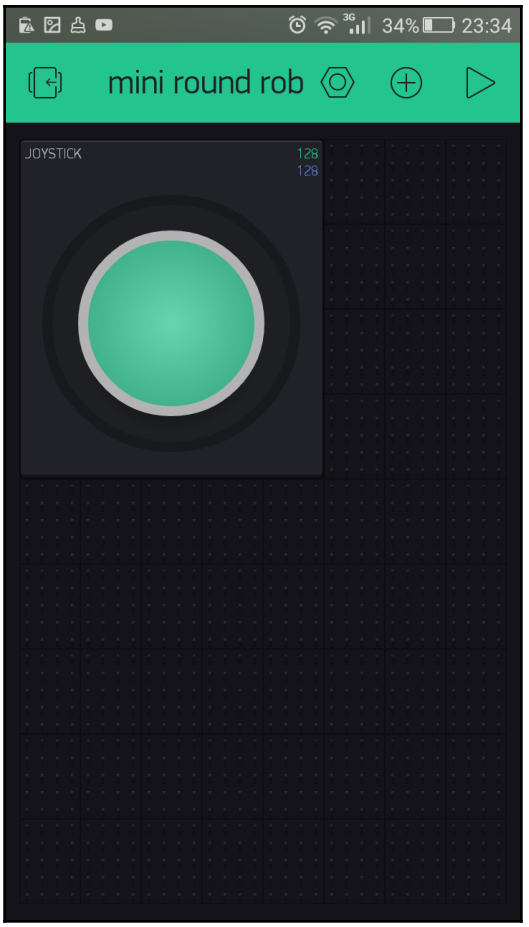
34%
23:34
mini round rob
JOYSTICK
128
128

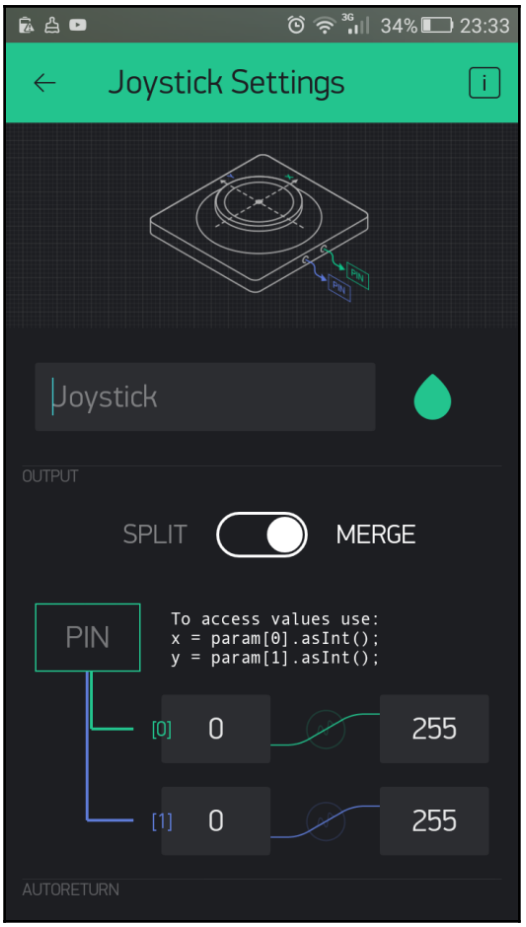
34% 23:33
Joystick Settings
Joystick
OUTPUT
SPLIT
MERGE
PIN
To access values use:
x = param[0].asInt();
y = param[1].asInt();
[0] 0
255
[1] 0
255
AUTORETURN

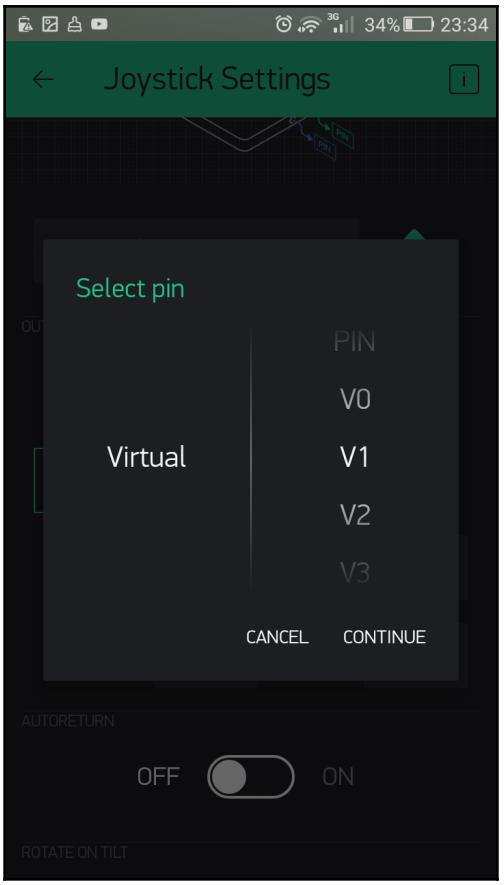
34%
23:34
Joystick Settings
i
Select pin
Virtual
PIN
V0
V1
V2
V3
CANCEL
CONTINUE
AUTORETURN
OFF
ON
ROTATE ON TILT

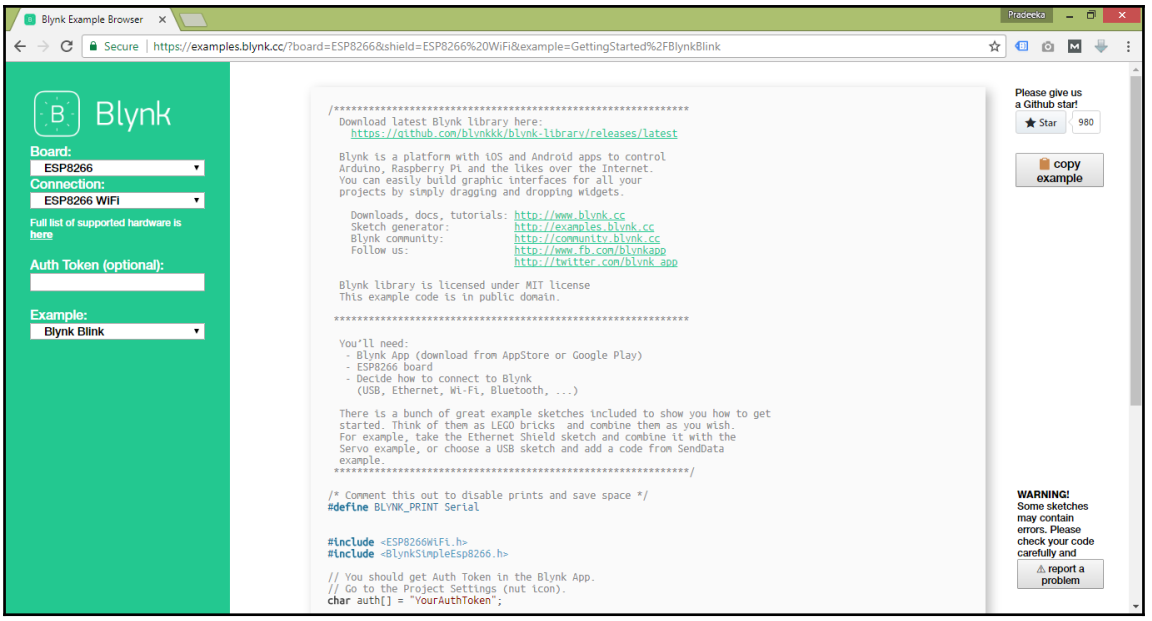
Blynk Example Browser
Pradeeka
Secure
https://examples.blynk.cc/?board=ESP8266&shield=ESP8266%20WiFi&example=GettingStarted%2FBlynkBlink
Blynk
Board:
ESP8266
Connection:
ESP8266 WiFi
Full list of supported hardware is here
Auth Token (optional):
Example:
Blynk Blink
/***
Download latest Blynk library here:
https://github.com/blynkkk/blynk-library/releases/latest
Blynk is a platform with iOS and Android apps to control
Arduino, Raspberry Pi and the likes over the Internet.
You can easily build graphic interfaces for all your
projects by simply dragging and dropping widgets.
Downloads, docs, tutorials: http://www.blynk.cc
Sketch generator: http://examples.blynk.cc
Blynk community: http://community.blynk.cc
Follow us: http://www.fb.com/blynkapp
http://twitter.com/blynk_app
Blynk library is licensed under MIT license
This example code is in public domain.
****
You'll need:
- Blynk App (download from AppStore or Google Play)
- ESP8266 board
- Decide how to connect to Blynk
(USB, Ethernet, Wi-Fi, Bluetooth, ...)
There is a bunch of great example sketches included to show you how to get
started. Think of them as LEGO bricks and combine them as you wish.
For example, take the Ethernet Shield sketch and combine it with the
Servo example, or choose a USB sketch and add a code from SendData
example.
***/
/* Comment this out to disable prints and save space */
#define BLYNK_PRINT Serial
#include <ESP8266WiFi.h>
#include <BlynkSimpleEsp8266.h>
// You should get Auth Token in the Blynk App.
// Go to the Project Settings (nut icon).
char auth[] = "YourAuthToken";
Please give us a Github star!
Star
980
copy example
WARNING!
Some sketches may contain errors. Please check your code carefully and
report a problem

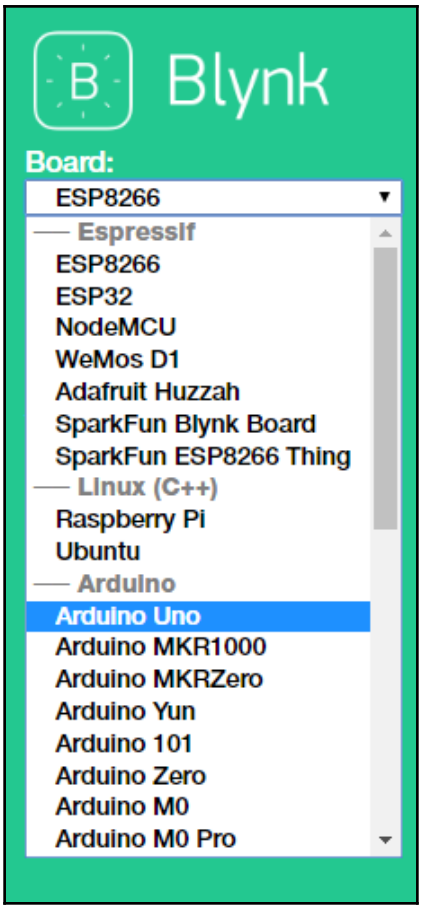
Blynk
Board:
ESP8266
Espressif
ESP8266
ESP32
NodeMCU
WeMos D1
Adafruit Huzzah
SparkFun Blynk Board
SparkFun ESP8266 Thing
Linux (C++)
Raspberry Pi
Ubuntu
Arduino
Arduino Uno
Arduino MKR1000
Arduino MKRZero
Arduino Yun
Arduino 101
Arduino Zero
Arduino M0
Arduino M0 Pro

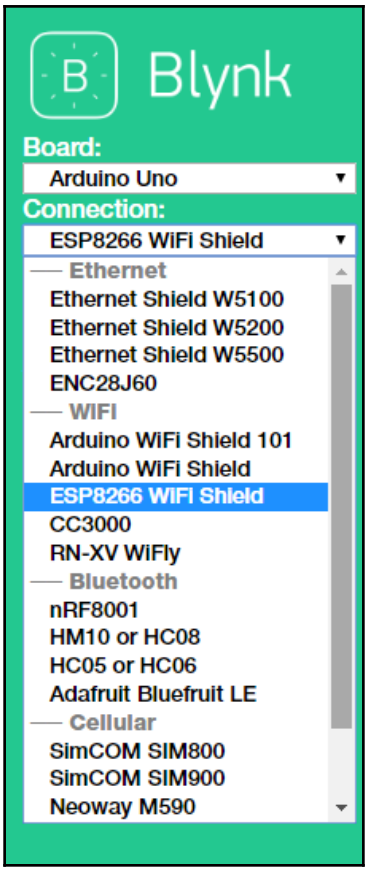
Blynk
Board:
Arduino Uno
Connection:
ESP8266 WiFi Shield
Ethernet
Ethernet Shield W5100
Ethernet Shield W5200
Ethernet Shield W5500
ENC28J60
WIFI
Arduino WiFi Shield 101
Arduino WiFi Shield
ESP8266 WiFi Shield
CC3000
RN-XV WiFly
Bluetooth
nRF8001
HM10 or HC08
HC05 or HC06
Adafruit Bluefruit LE
Cellular
SimCOM SIM800
SimCOM SIM900
Neoway M590

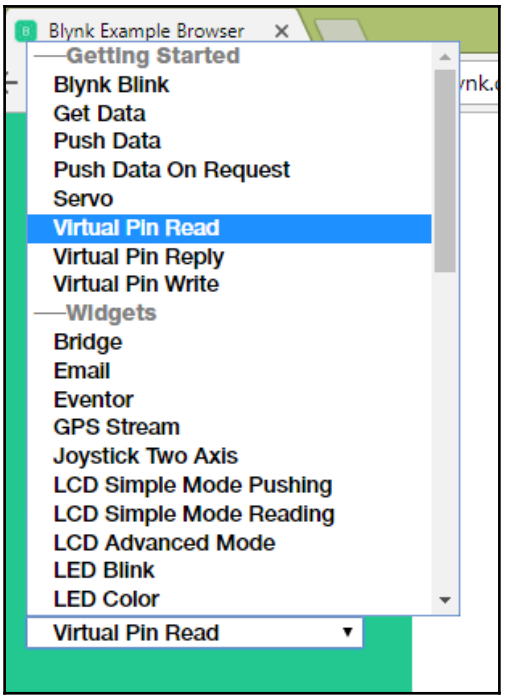
Blynk Example Browser
Getting Started
Blynk Blink
Get Data
Push Data
Push Data On Request
Servo
Virtual Pin Read
Virtual Pin Reply
Virtual Pin Write
Widgets
Bridge
Email
Eventor
GPS Stream
Joystick Two Axis
LCD Simple Mode Pushing
LCD Simple Mode Reading
LCD Advanced Mode
LED Blink
LED Color
Virtual Pin Read

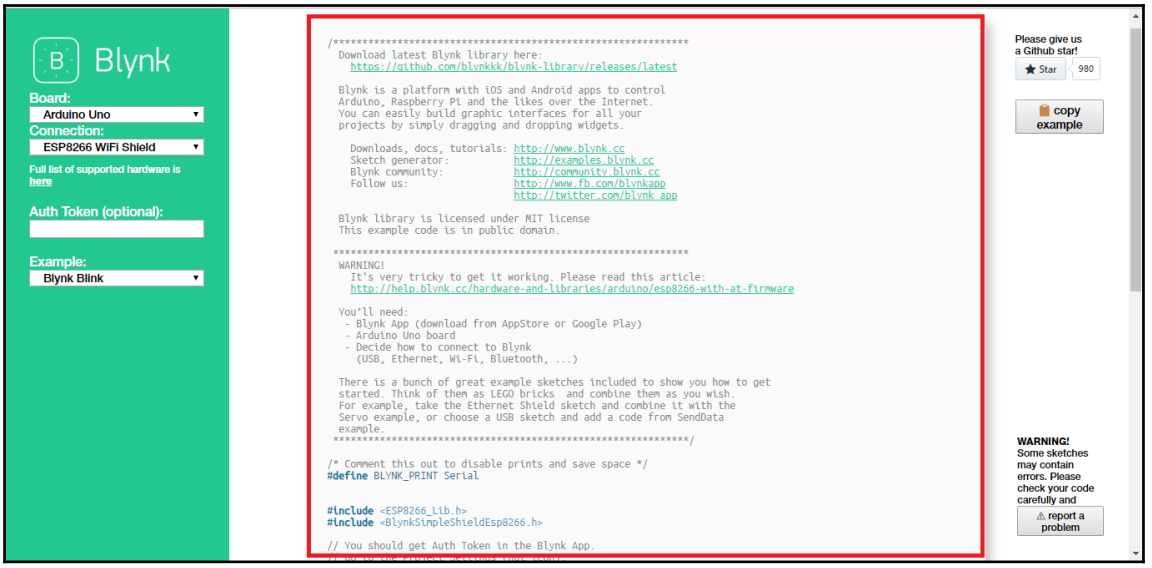
Blynk
Board:
Arduino Uno
Connection:
ESP8266 WiFi Shield
Full list of supported hardware is here
Auth Token (optional):
Example:
Blynk Blink
/***
Download latest Blynk library here:
https://github.com/blynkkk/blynk-library/releases/latest
Blynk is a platform with iOS and Android apps to control
Arduino, Raspberry Pi and the likes over the Internet.
You can easily build graphic interfaces for all your
projects by simply dragging and dropping widgets.
Downloads, docs, tutorials: http://www.blynk.cc
Sketch generator: http://examples.blynk.cc
Blynk community: http://community.blynk.cc
Follow us: http://www.fb.com/blynkapp
http://twitter.com/blynk_app
Blynk library is licensed under MIT license
This example code is in public domain.
****
WARNING!
It's very tricky to get it working. Please read this article:
http://help.blynk.cc/hardware-and-libraries/arduino/esp8266-with-at-firmware
You'll need:
- Blynk App (download from AppStore or Google Play)
- Arduino Uno board
- Decide how to connect to Blynk
(USB, Ethernet, Wi-Fi, Bluetooth, ...)
There is a bunch of great example sketches included to show you how to get
started. Think of them as LEGO bricks and combine them as you wish.
For example, take the Ethernet Shield sketch and combine it with the
Servo example, or choose a USB sketch and add a code from SendData
example.
***/
/* Comment this out to disable prints and save space */
#define BLYNK_PRINT Serial
#include <ESP8266_Lib.h>
#include <BlynkSimpleShieldEsp8266.h>
// You should get Auth Token in the Blynk App.
Please give us a Github star!
Star
980
copy example
WARNING!
Some sketches may contain errors. Please check your code carefully and
report a problem

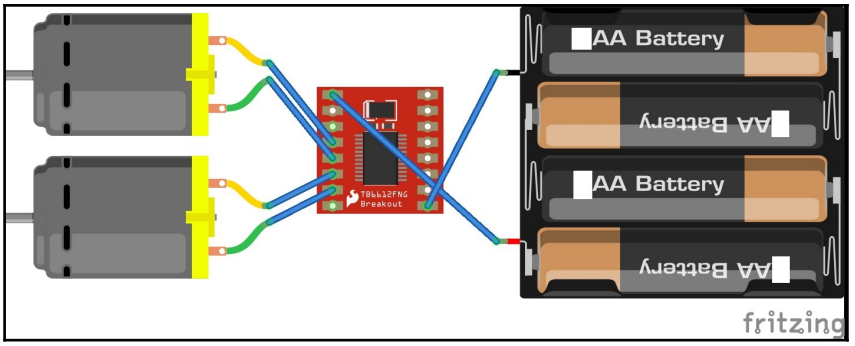
AA Battery
AA Battery
AA Battery
AA Battery
TB6612FNG
Breakout
fritzing

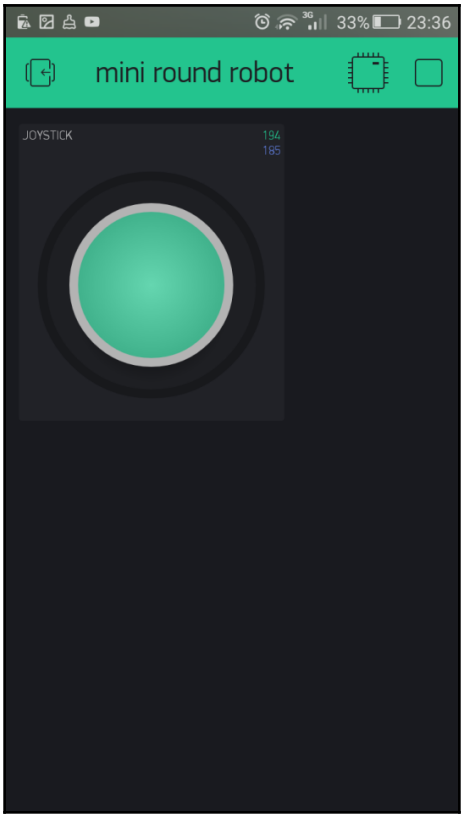
33%
23:36
mini round robot
JOYSTICK
194
185

Chapter 03: Using Encoders

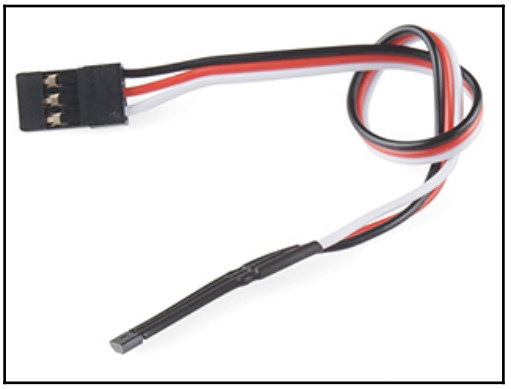

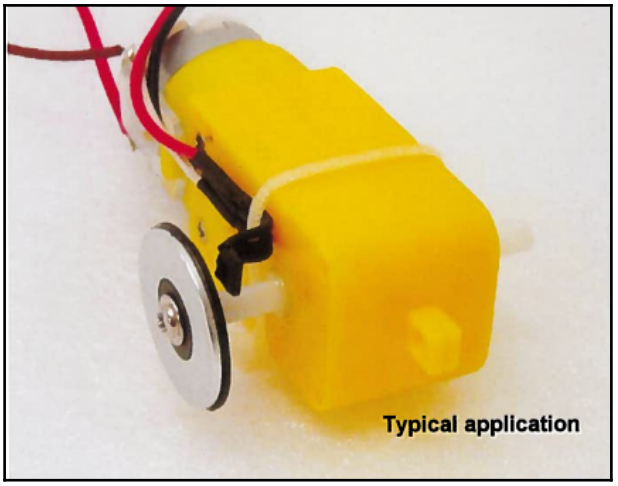
Typical application

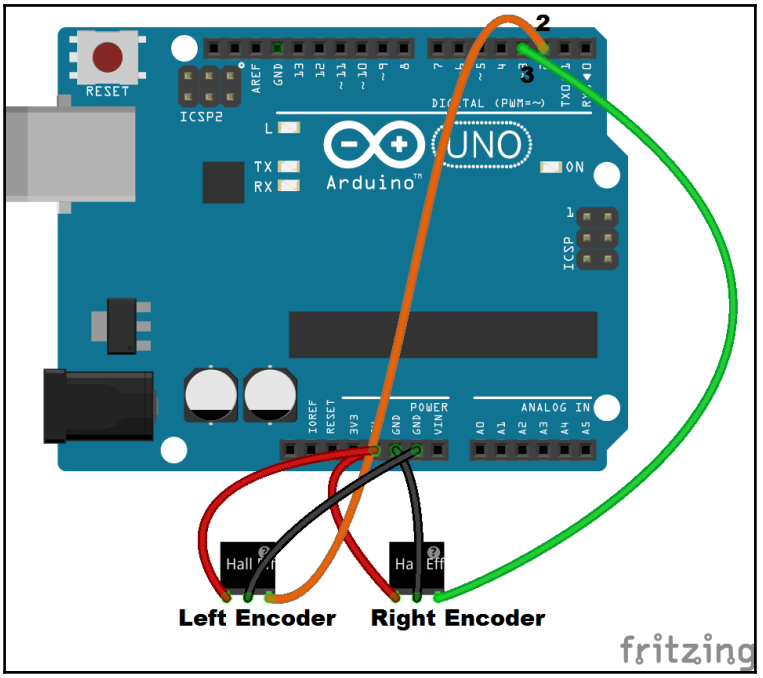
2
3
RESET
ICSP2
AREF
GND
13
12
~ 11
~ 10
~ 9
8
7
~ 5
4
TX0
RX0
DIGITAL (PWM=~)
L
TX
RX
UNO
Arduino
ON
ICSP
IOREF
RESET
3V3
GND
GND
VIN
POWER
ANALOG IN
A0
A1
A2
A3
A4
A5
Hall
Left Encoder
Right Encoder
fritzing

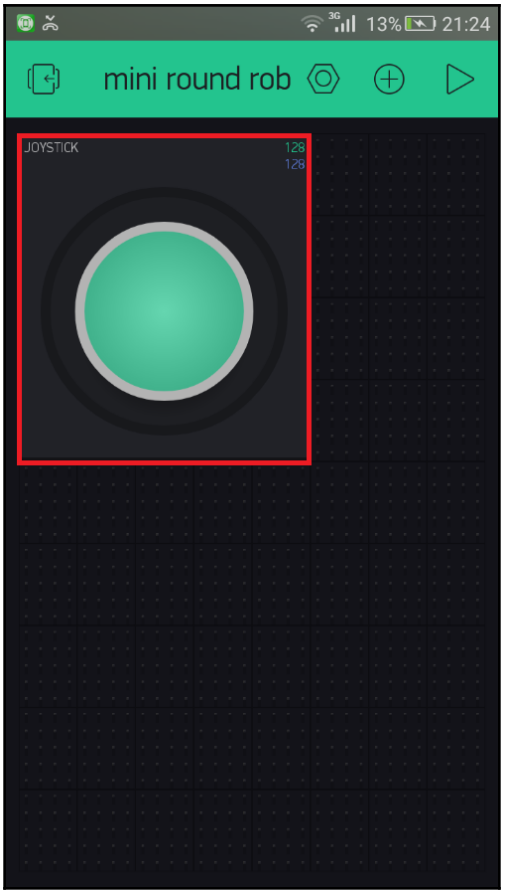
13%
21:24
mini round rob
JOYSTICK
128
128

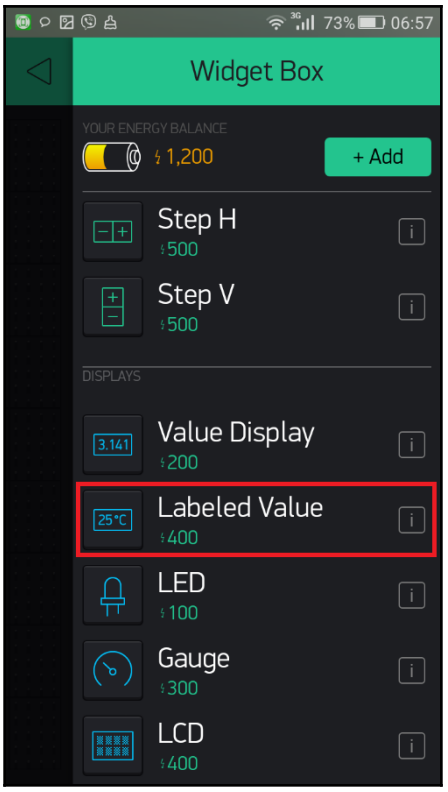
73%
06:57
Widget Box
YOUR ENERGY BALANCE
1,200
+ Add
Step H
500
Step V
500
DISPLAYS
Value Display
200
Labeled Value
400
LED
100
Gauge
300
LCD
400

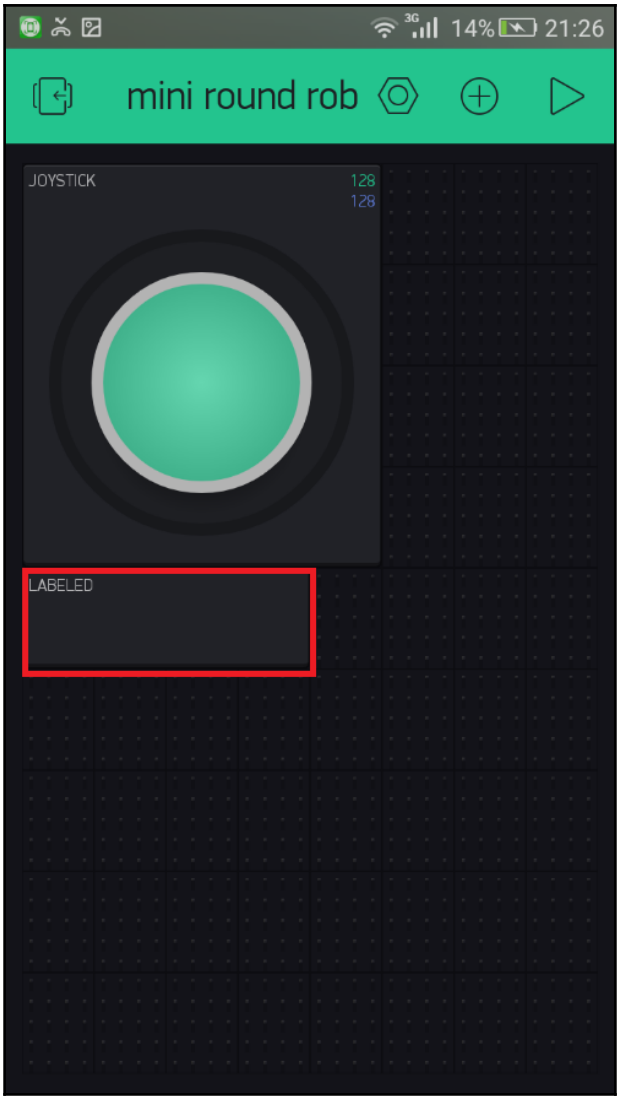
14%
21:26
mini round rob
JOYSTICK
128
128
LABELED

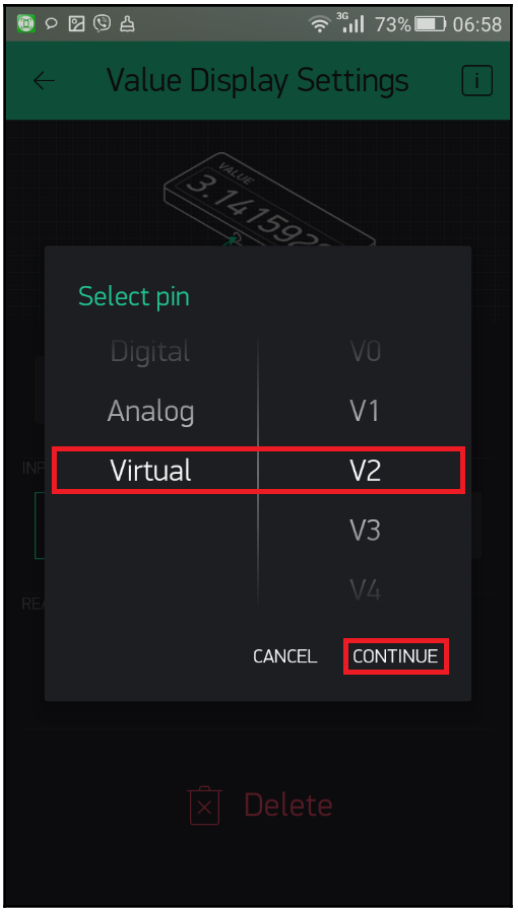
73%
06:58
Value Display Settings
Select pin
Digital
Analog
Virtual
V0
V1
V2
V3
V4
CANCEL
CONTINUE
Delete

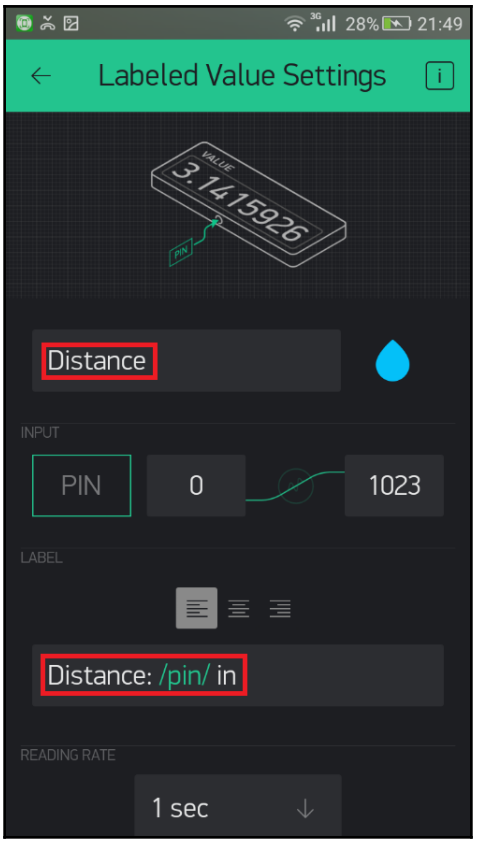
28% 21:49
Labeled Value Settings
VALUE
3.14159 26
PIN
Distance
INPUT
PIN
0
1023
LABEL
Distance: /pin/ in
READING RATE
1 sec

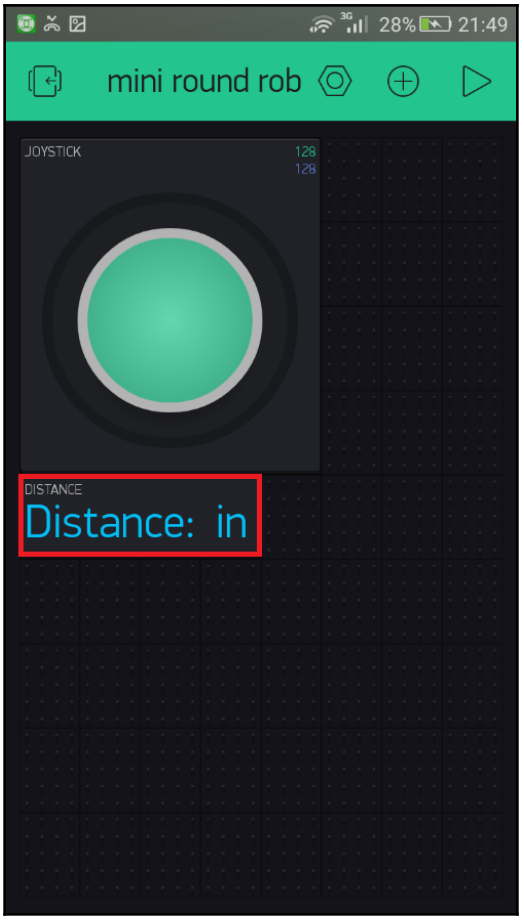
28%
21:49
mini round rob
JOYSTICK
128
128
DISTANCE
Distance: in

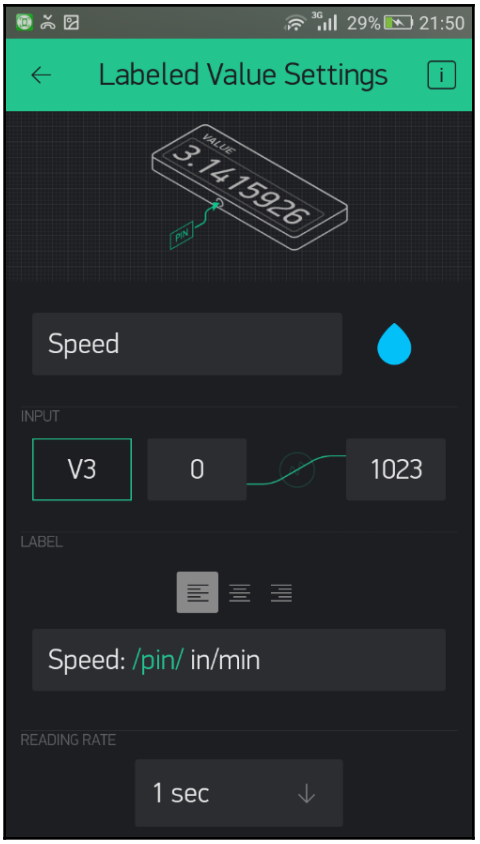
29% 21:50
Labeled Value Settings
VALUE
3.1415926
PIN
Speed
INPUT
V3
0
1023
LABEL
Speed: /pin/ in/min
READING RATE
1 sec

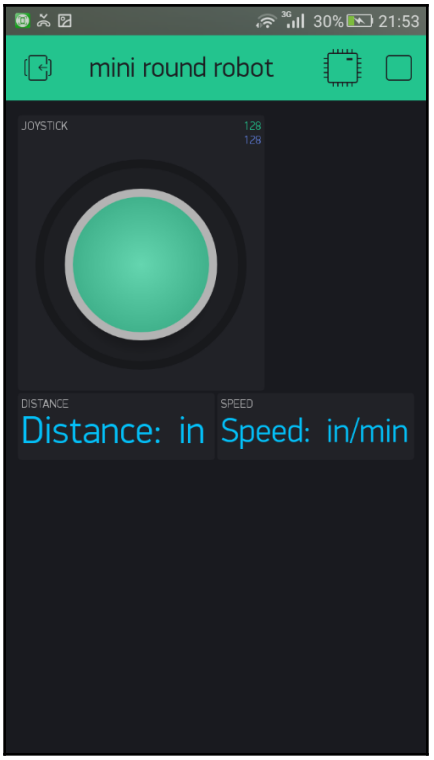
30%
21:53
mini round robot
JOYSTICK
128
128
DISTANCE
Distance: in
SPEED
Speed: in/min

Chapter 04: Building a Mini Round Robot with the Feather HUZZAH ESP8266

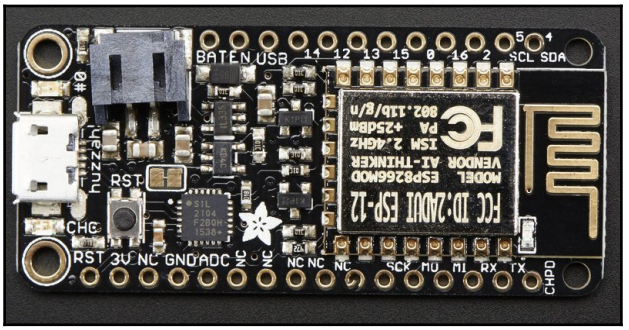

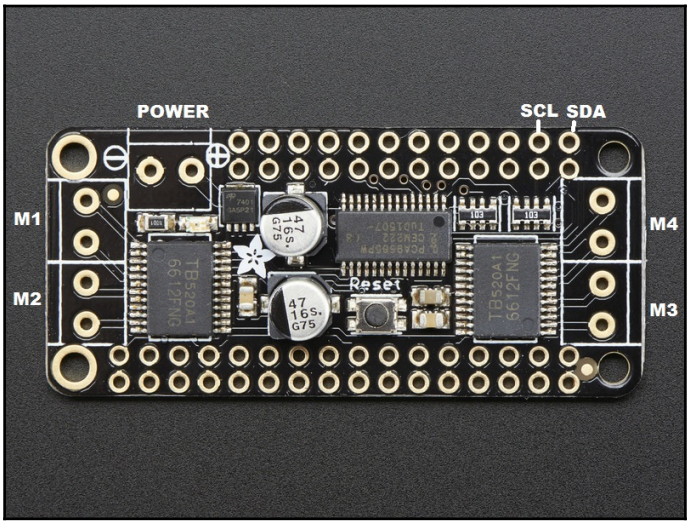

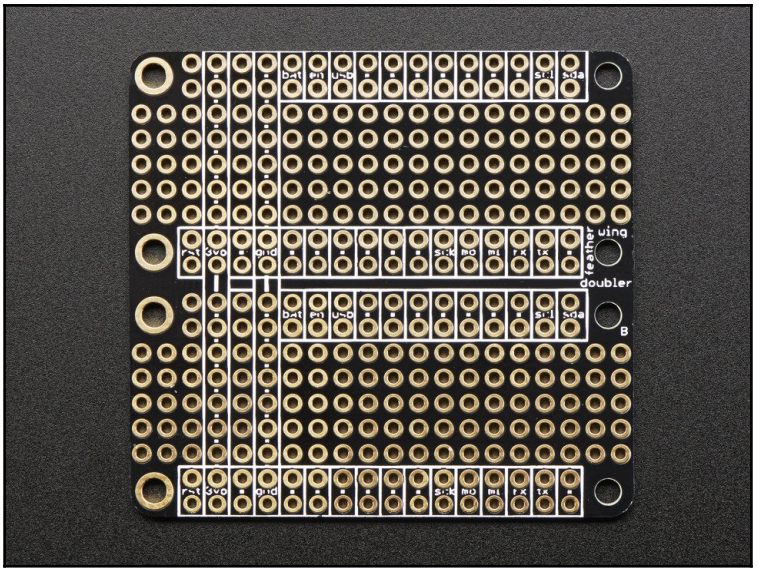
feather wing
doubler

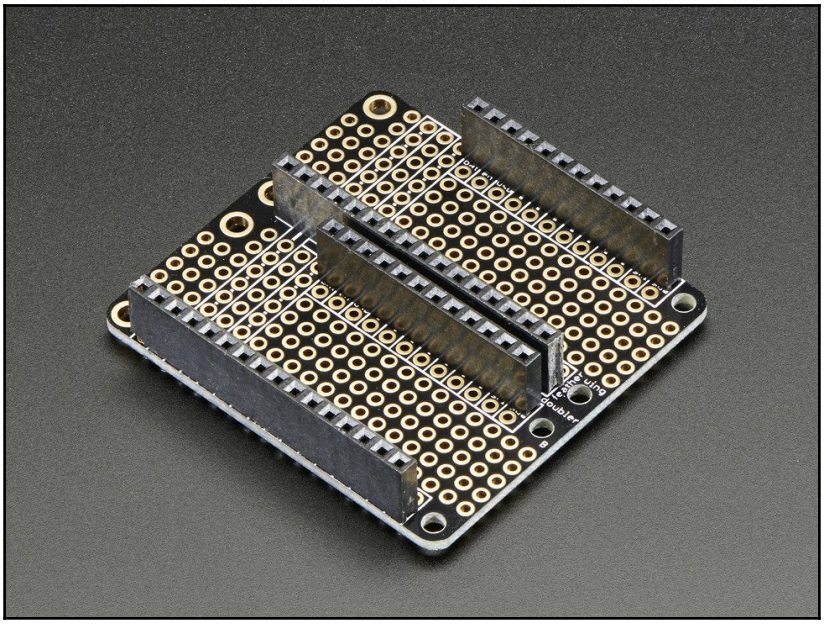
feather wing
doubler

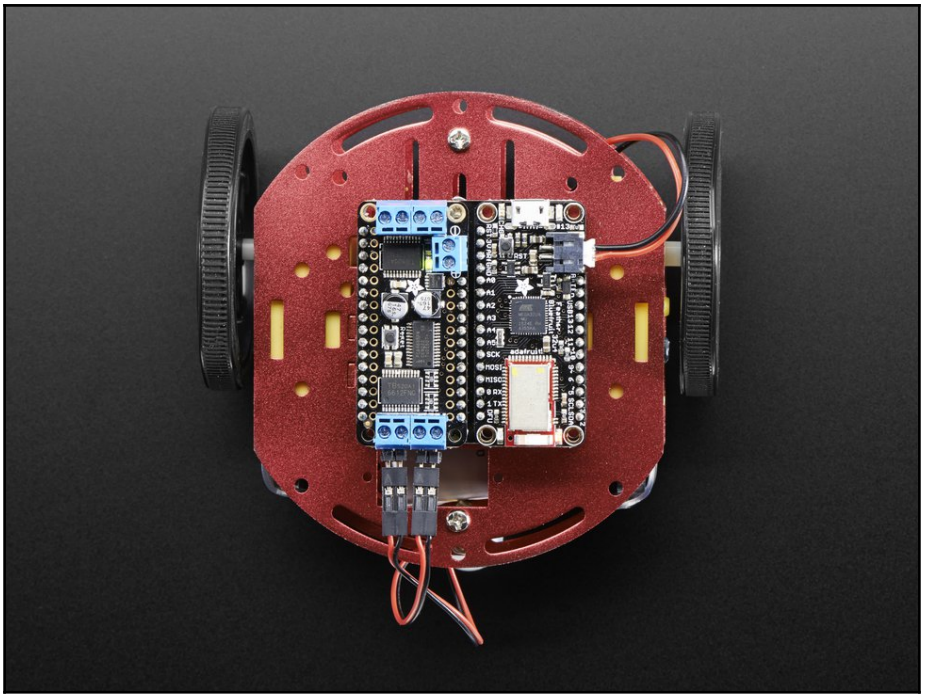

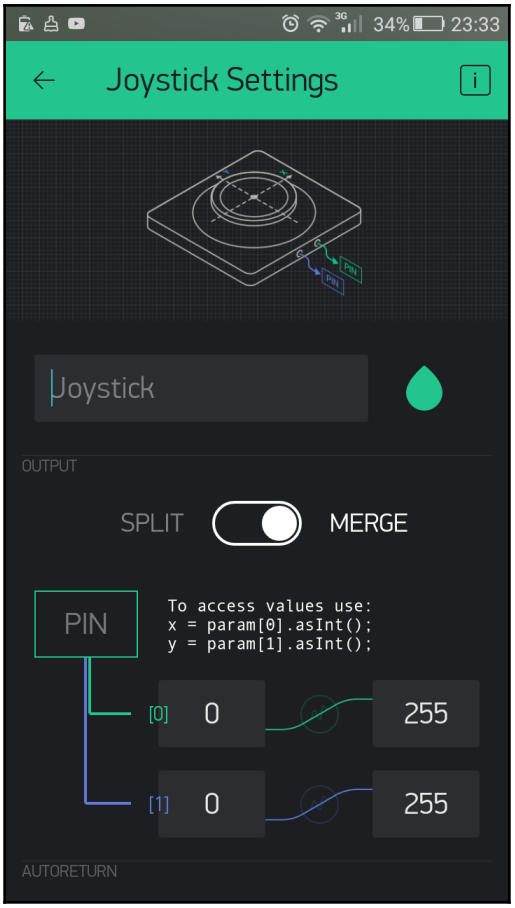
34%
23:33
Joystick Settings
Joystick
OUTPUT
SPLIT
MERGE
PIN
To access values use:
x = param[0].asInt();
y = param[1].asInt();
[0]
0
255
[1]
0
255
AUTORETURN

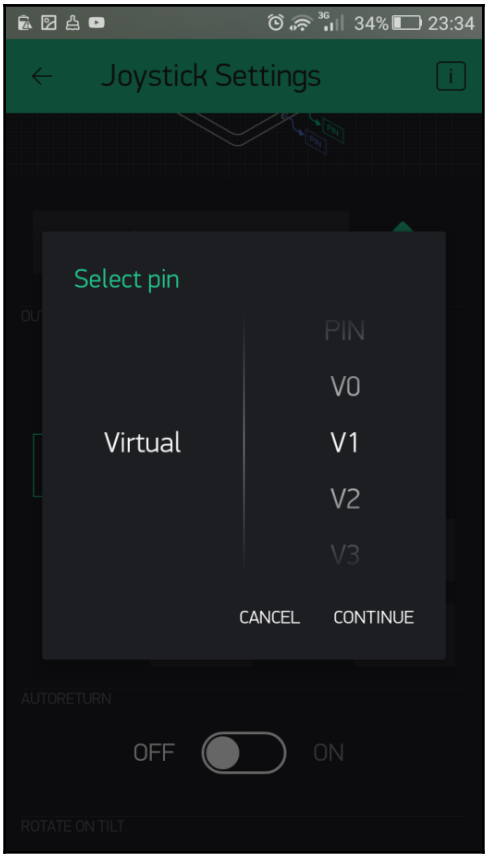
34% 23:34
Joystick Settings
Select pin
PIN
V0
Virtual
V1
V2
V3
CANCEL
CONTINUE
AUTORETURN
OFF
ON
ROTATE ON TILT

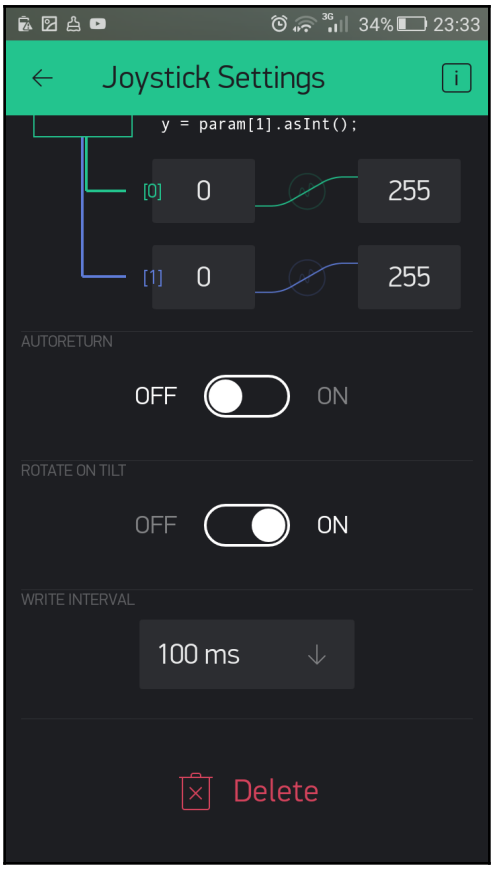
34% 23:33
Joystick Settings
y = param[1].asInt();
[0] 0
255
[1] 0
255
AUTORETURN
OFF
ON
ROTATE ON TILT
OFF
ON
WRITE INTERVAL
100 ms
Delete

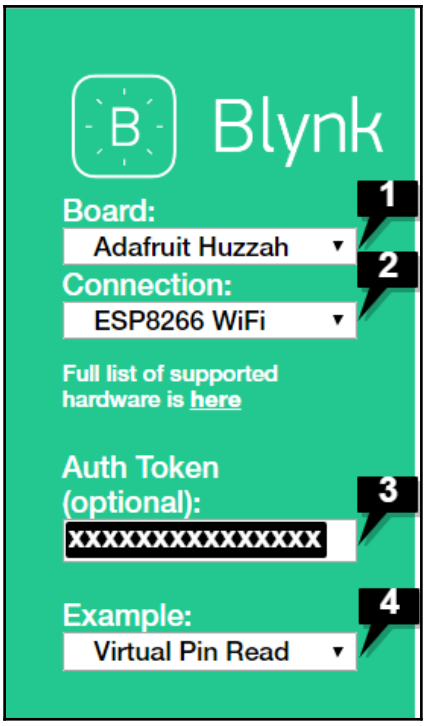
Blynk
Board:
Adafruit Huzzah
1
Connection:
ESP8266 WiFi
2
Full list of supported hardware is here
Auth Token (optional):
XXXXXXXXXXXXXXX
3
Example:
Virtual Pin Read
4

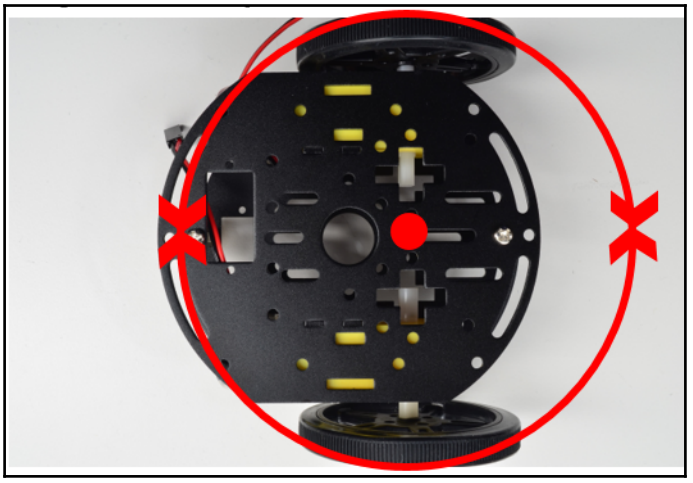

Chapter 05: Line-Following Zumo Robot

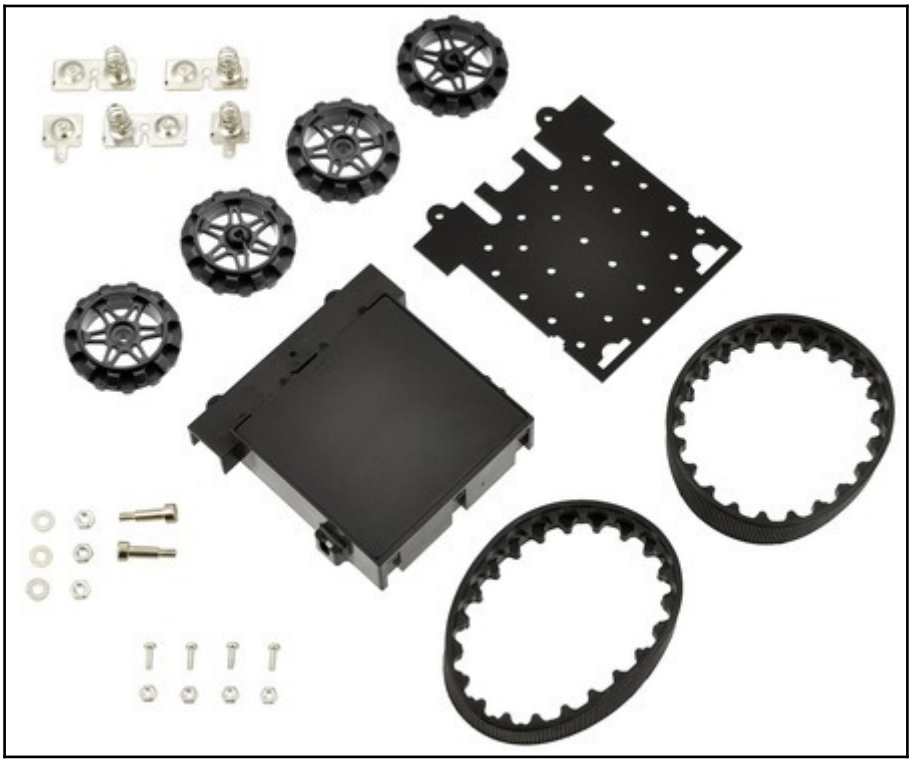

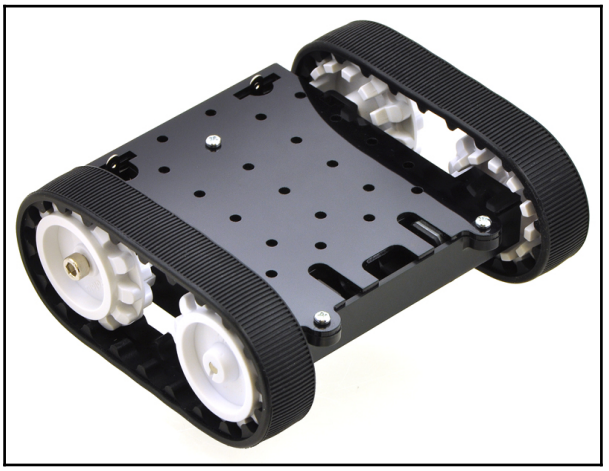

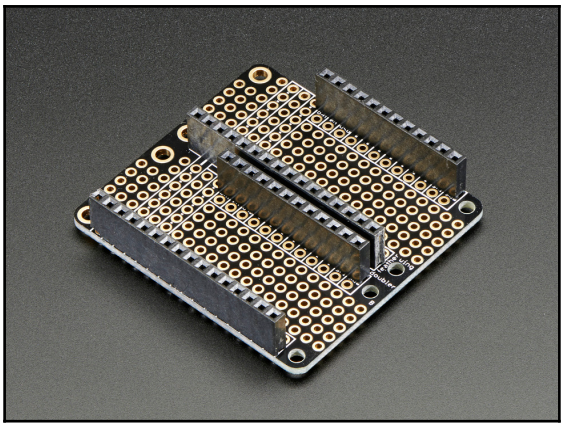

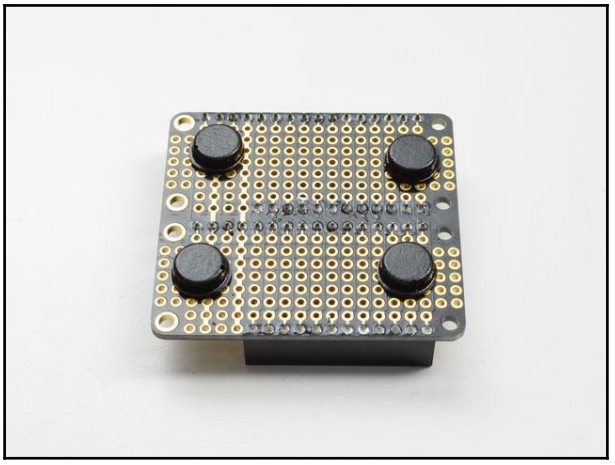

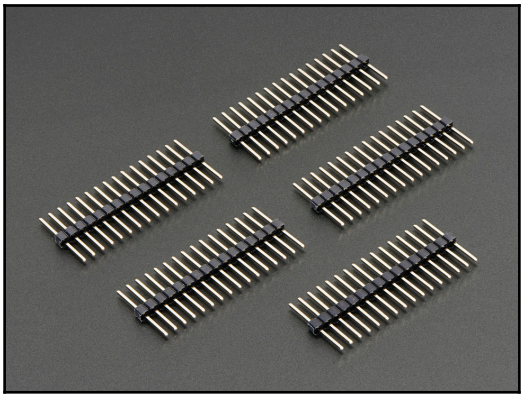

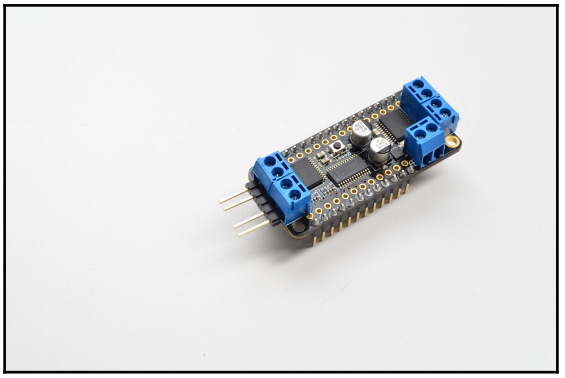


SparkFun Line Follower Array


sparkfun
Line Follower Array
b0
b1
b2
b3
b4
b5
b6
b7
(-)
0
(+)
IR PWR

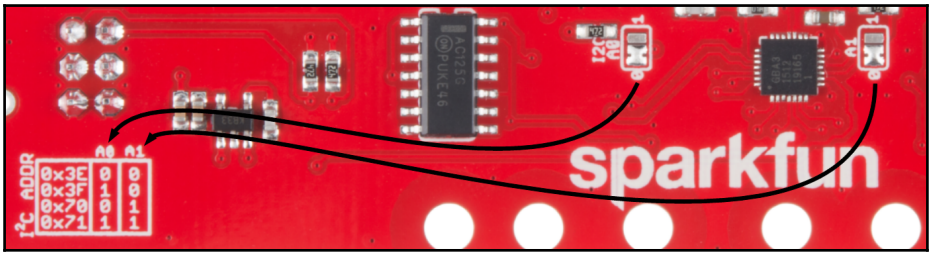
sparkfun
I²C ADDR
A0 A1
0x3E 0 0
0x3F 1 0
0x70 0 1
0x71 1 1
A0
A1

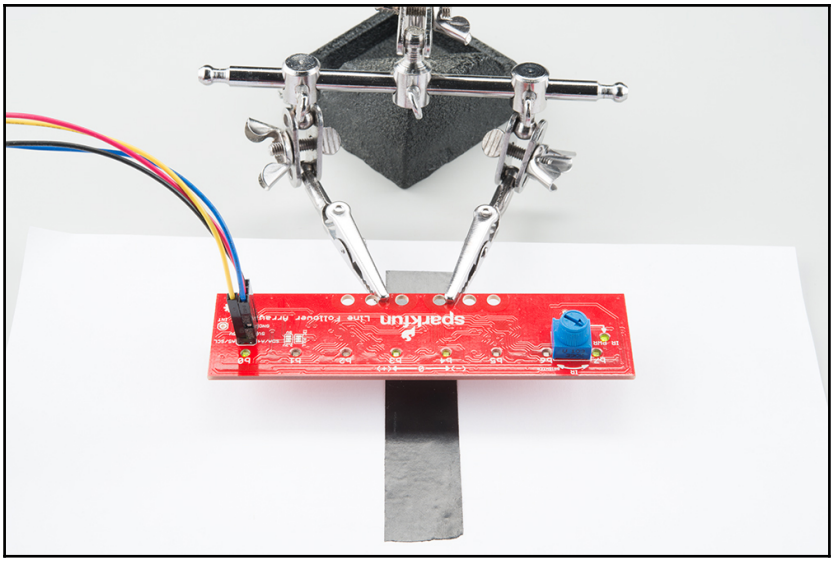
sparkfun
Line Follower Array

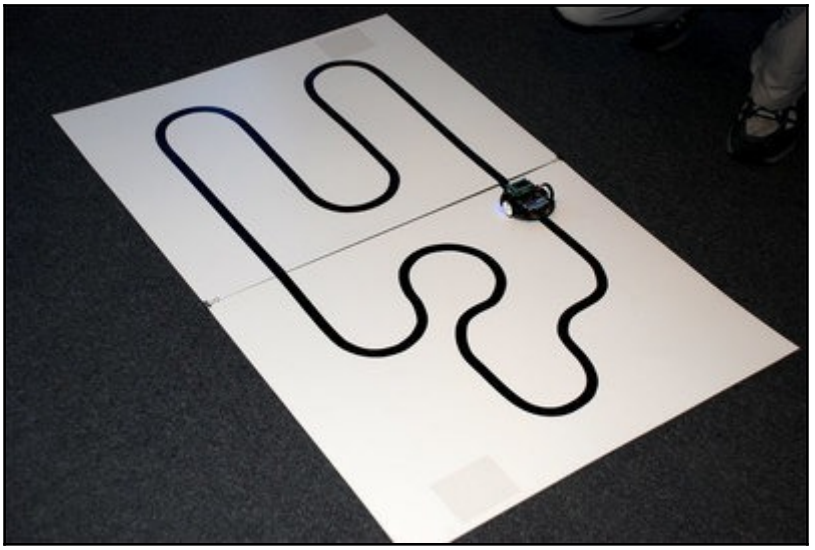

Chapter 06: Building an ESP8266 Robot Controller

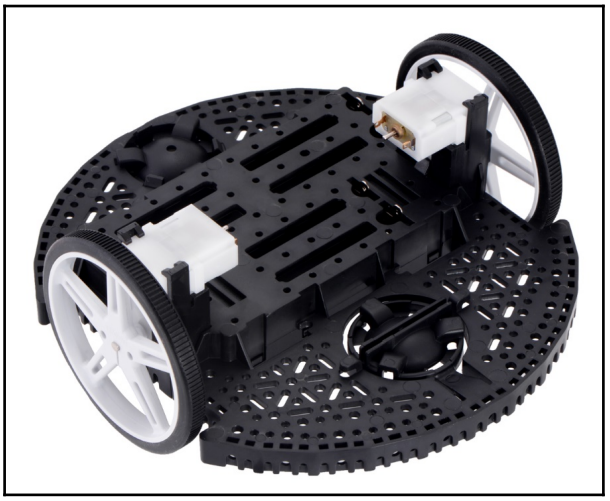


NIMH AA 2200mAh 1.2V
www.pololu.com

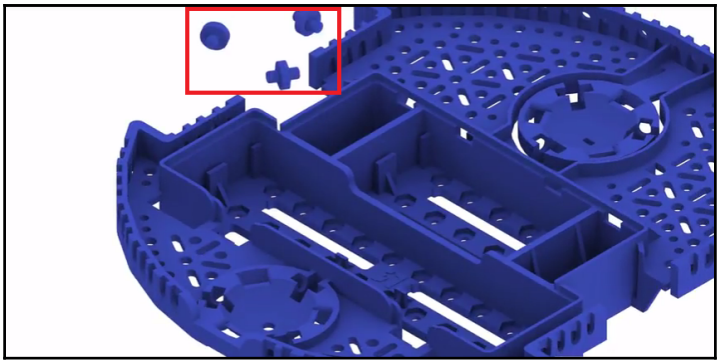

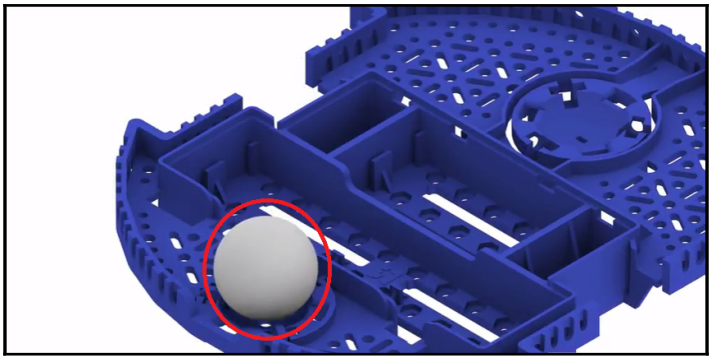

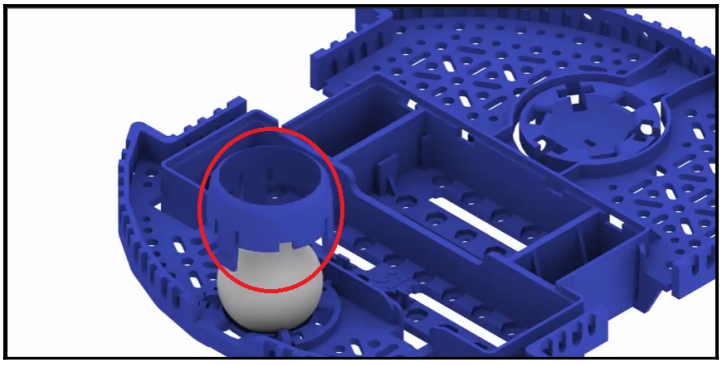

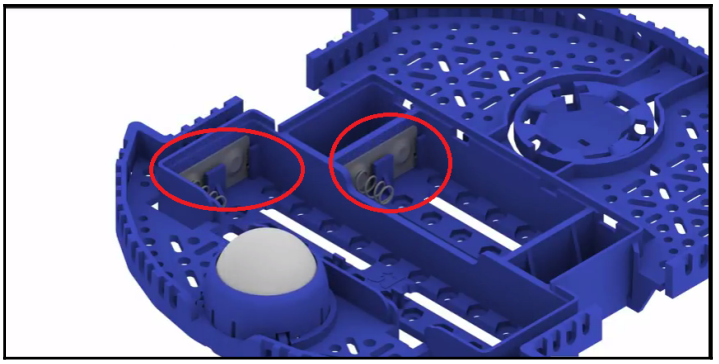

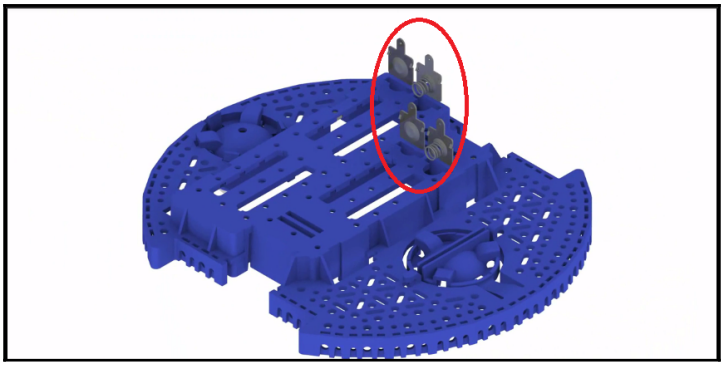

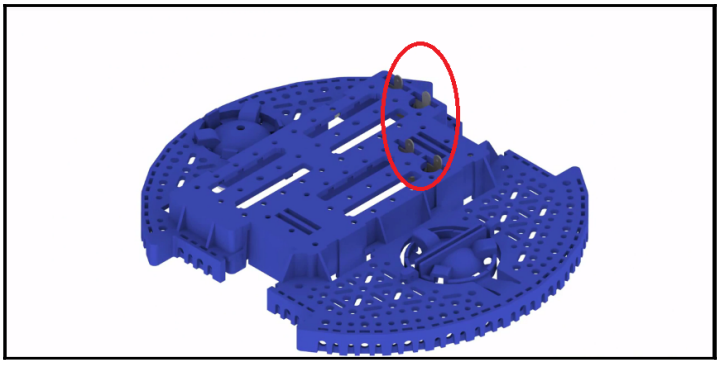

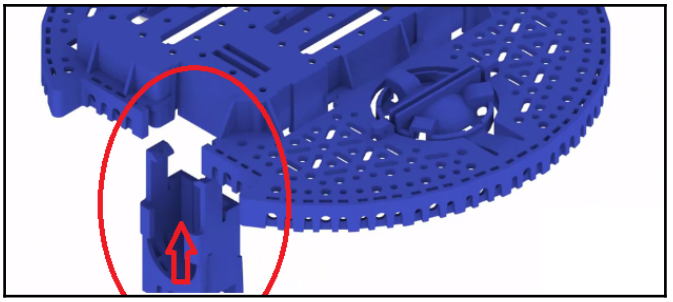


CLICK!

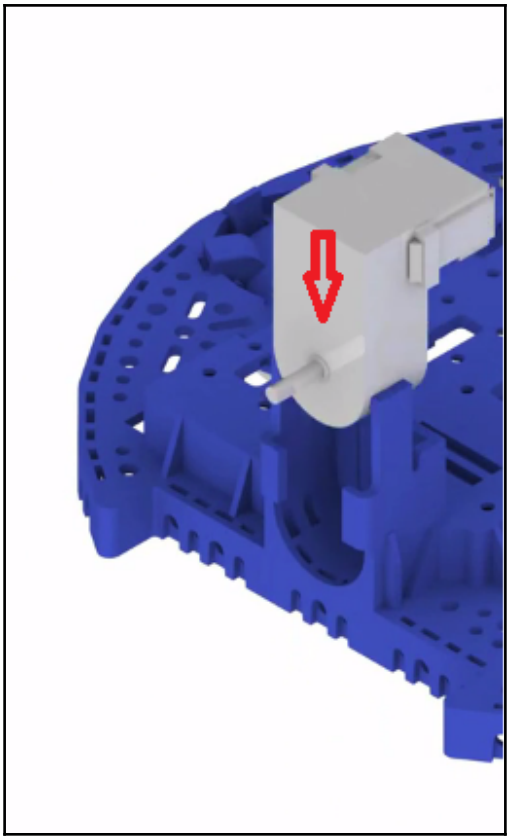

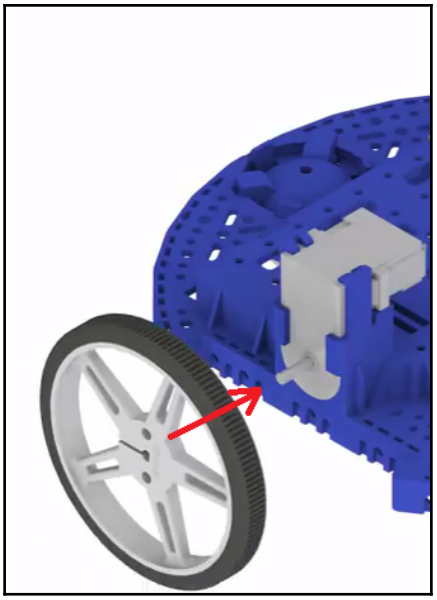

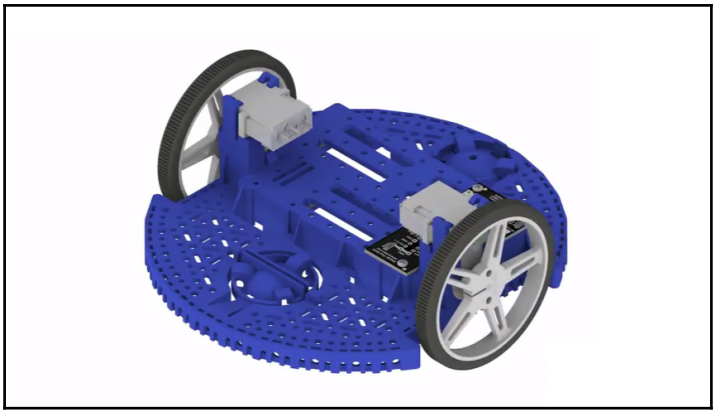

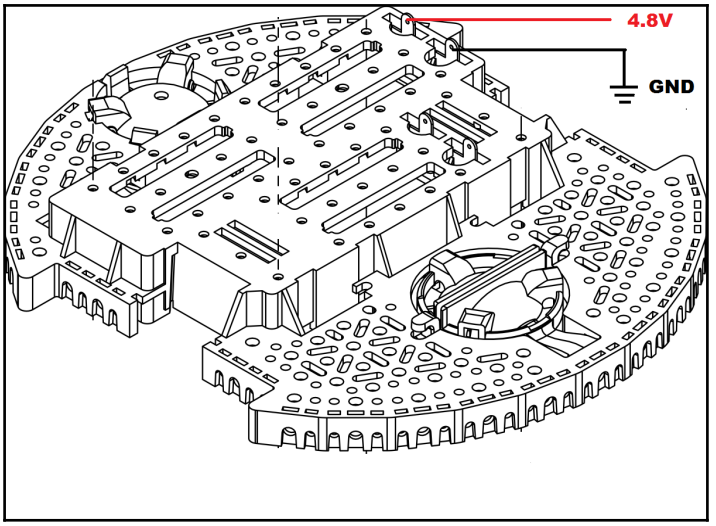
4.8V
GND

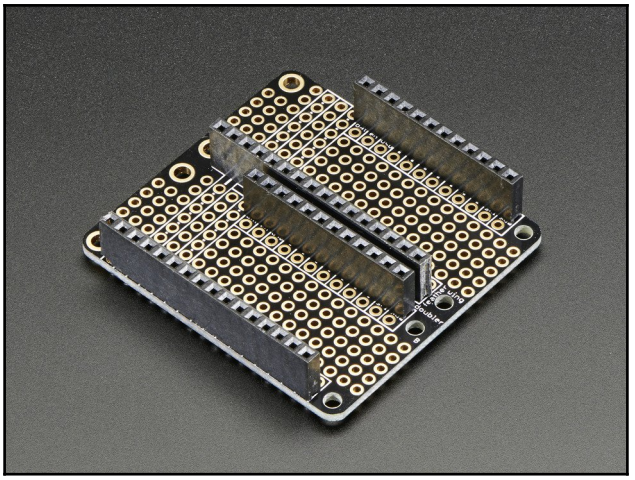

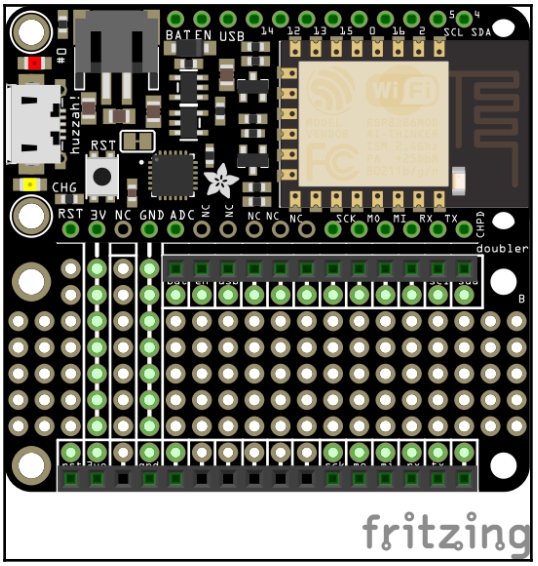
BAT EN USB
14 12 13 15 0 16 2
5 4
SCL SDA
huzzah!
RST
CHG
RST 3V NC GND ADC NC NC NC NC NC SCK MO MI RX TX
CHPD
doubler
fritzing

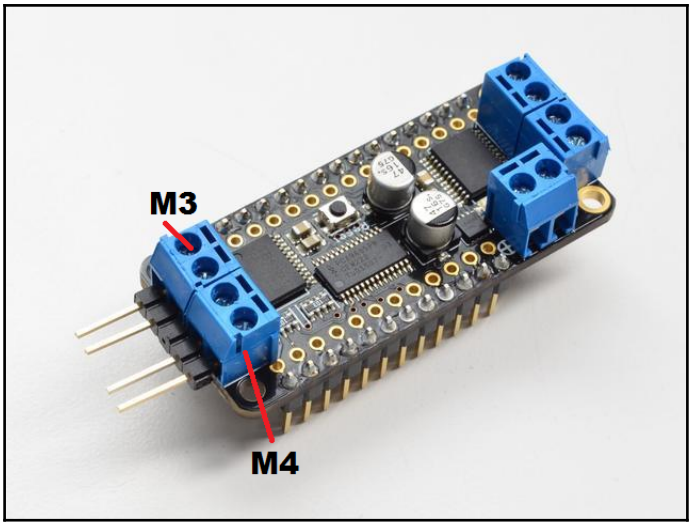
M3
M4

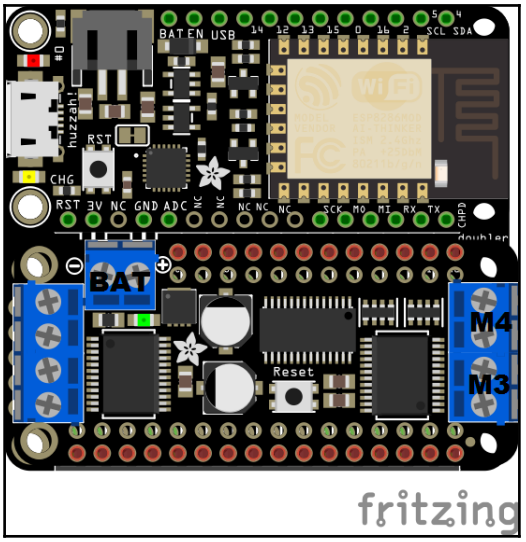
BAT
M4
M3
Reset
RST
CHG
fritzing

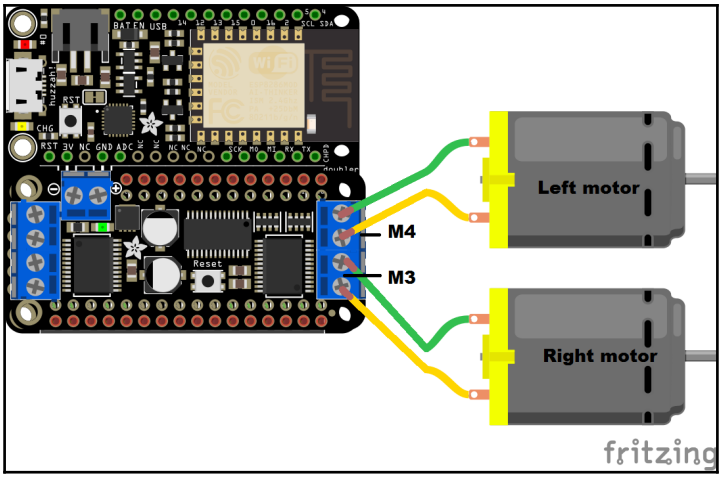
Left motor
M4
M3
Right motor
fritzing

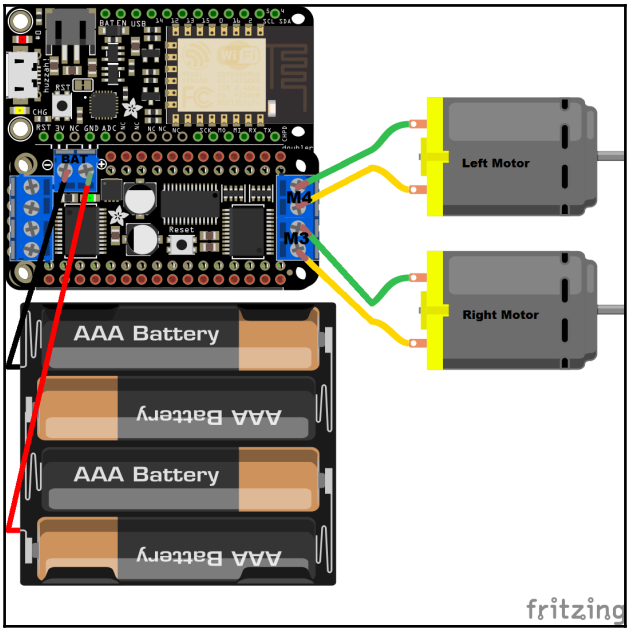
Left Motor
M4
M3
Right Motor
AAA Battery
AAA Battery
AAA Battery
AAA Battery
fritzing

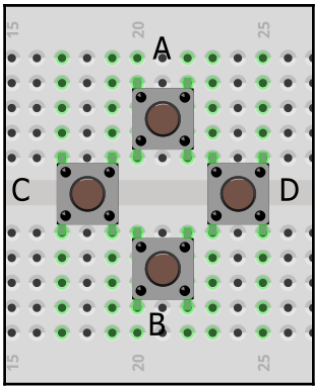
A
C
D
B
15
20
25

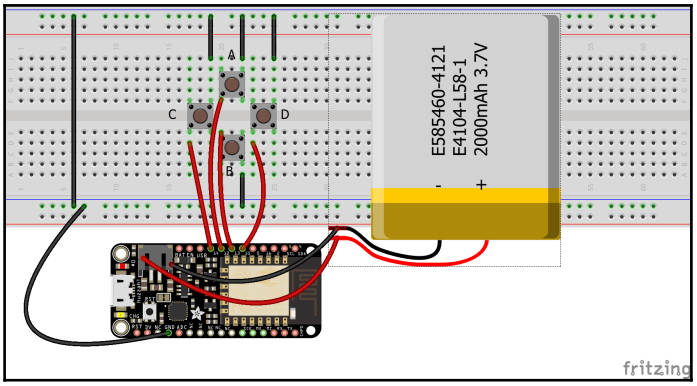
A
C
D
B
E585460-4121
E4104-L58-1
2000mAh 3.7V
-
+
fritzing

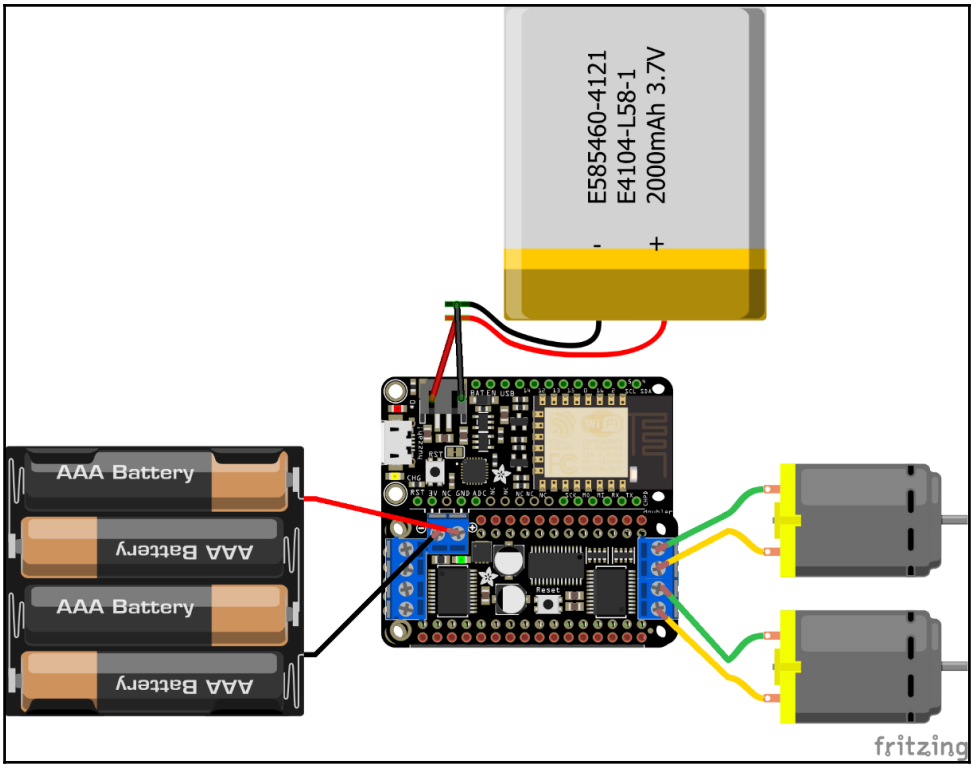
AAA Battery
AAA Battery
AAA Battery
AAA Battery
E585460-4121
E4104-L58-1
2000mAh 3.7V
-
+
fritzing

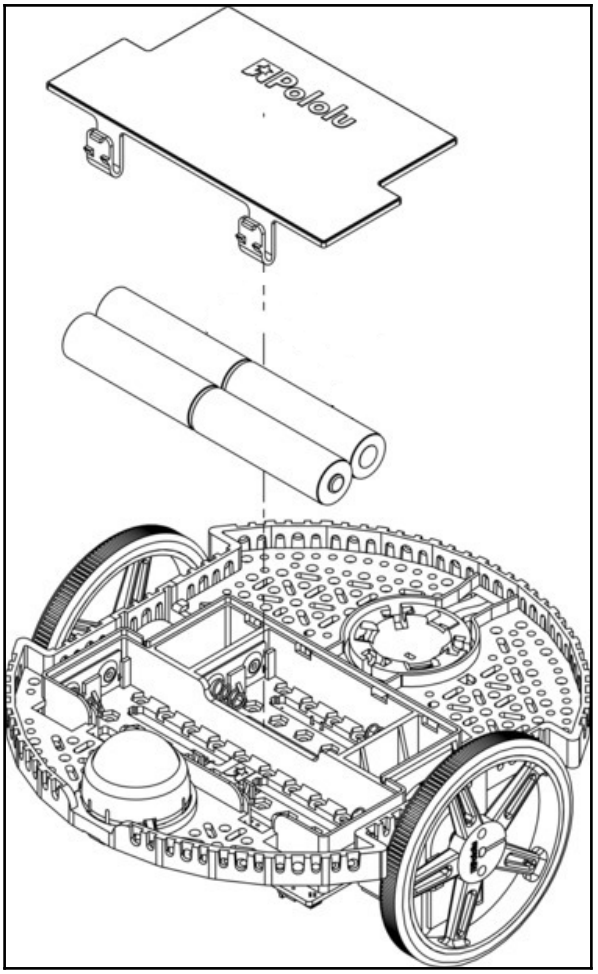
Pololu

Chapter 07: Building a Gripper Robot

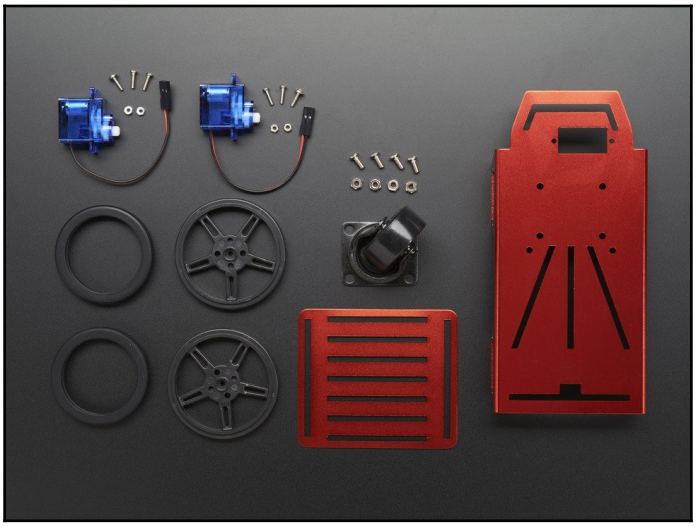

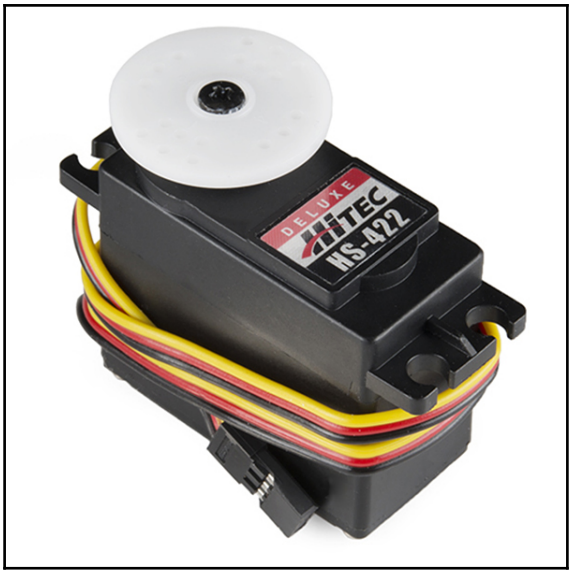
DELUXE
HITEC
HS-422

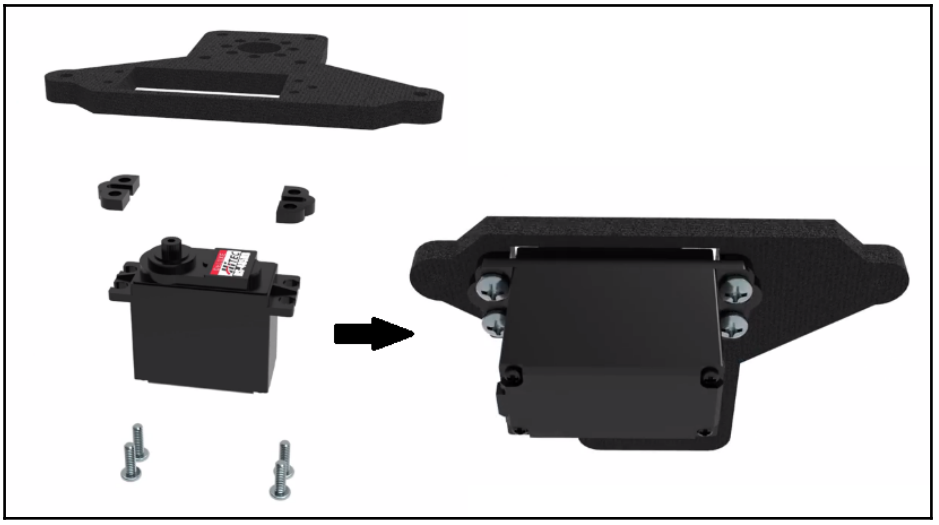


1
2
3
4

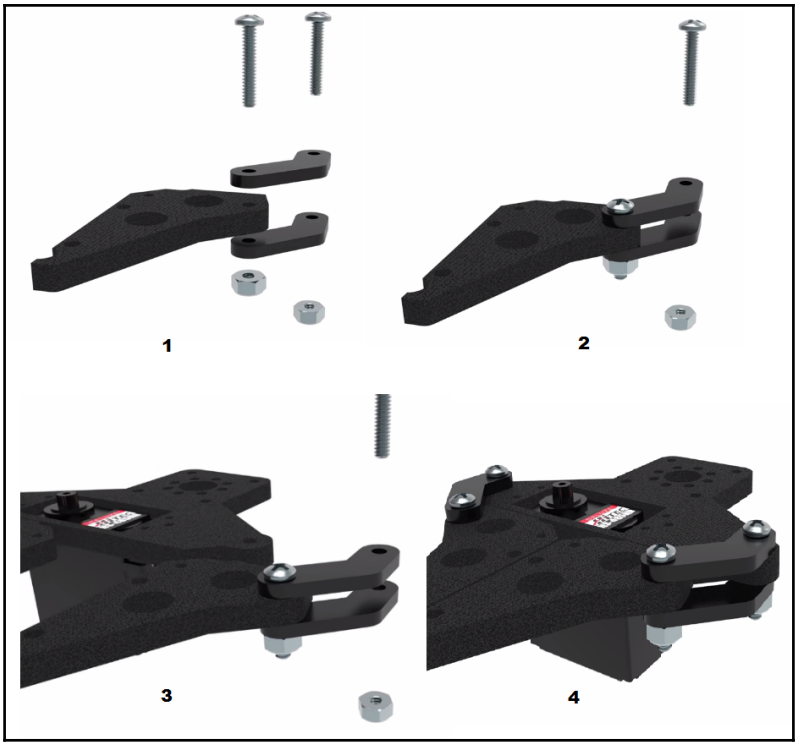
1
2
3
4

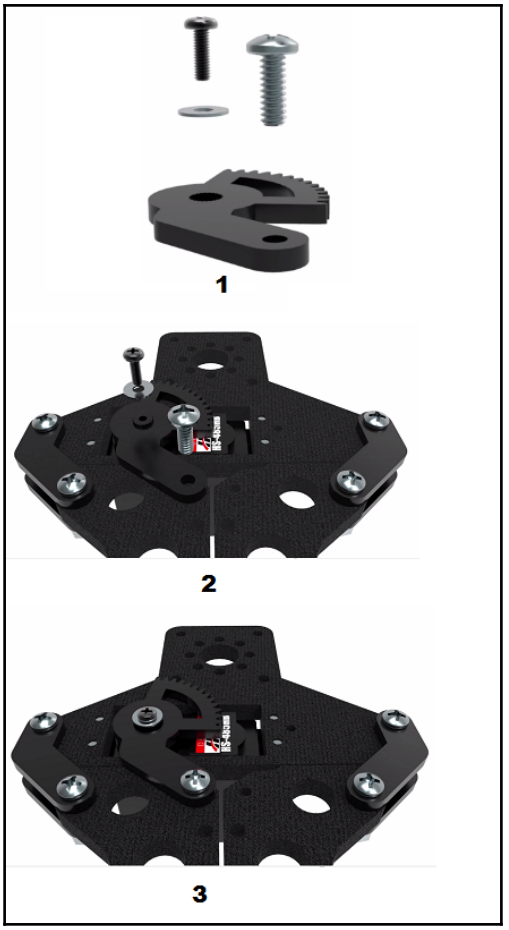
1
2
3

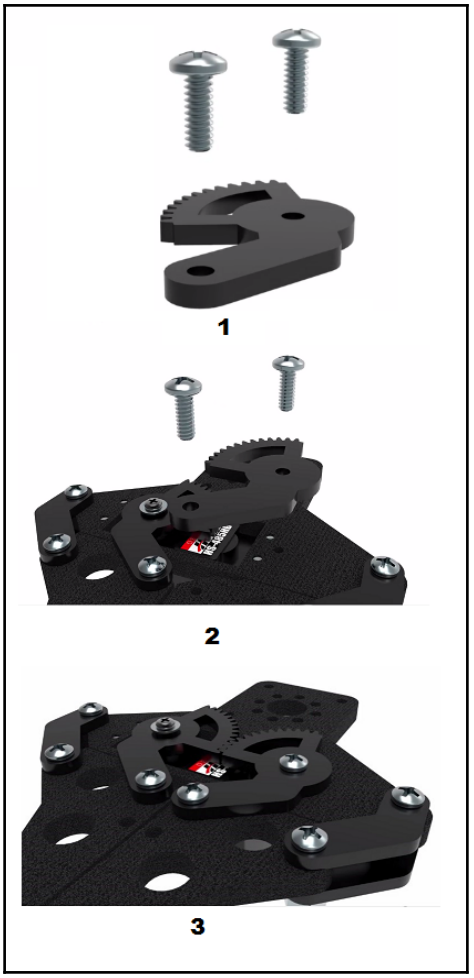
1
2
3

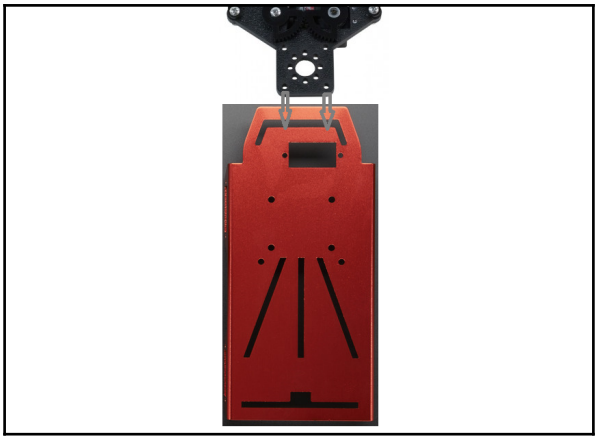

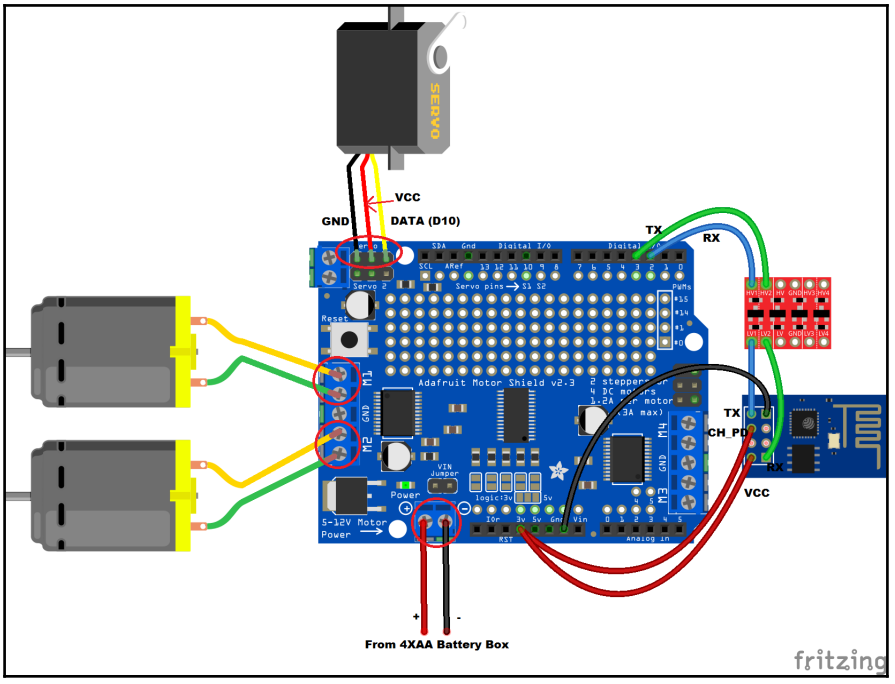
SERVO
VCC
GND
DATA (D10)
TX
RX
Adafruit Motor Shield v2.3
TX
CH_PD
RX
VCC
From 4XAA Battery Box
fritzing

Chapter 08: Photo Rover Robot

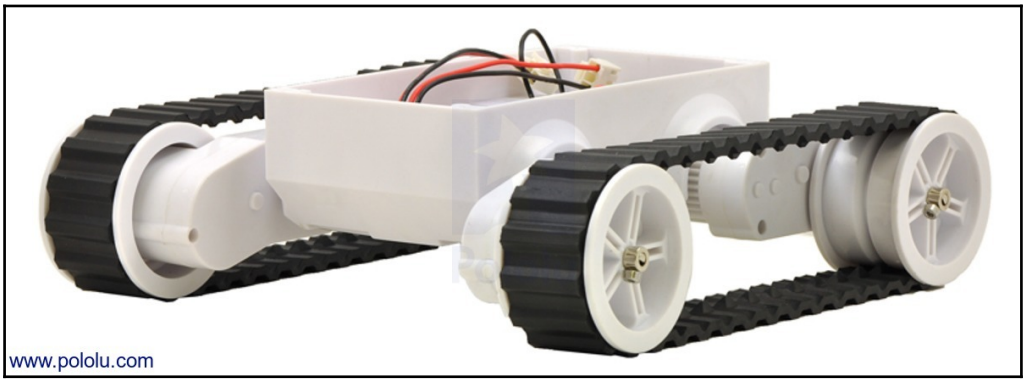

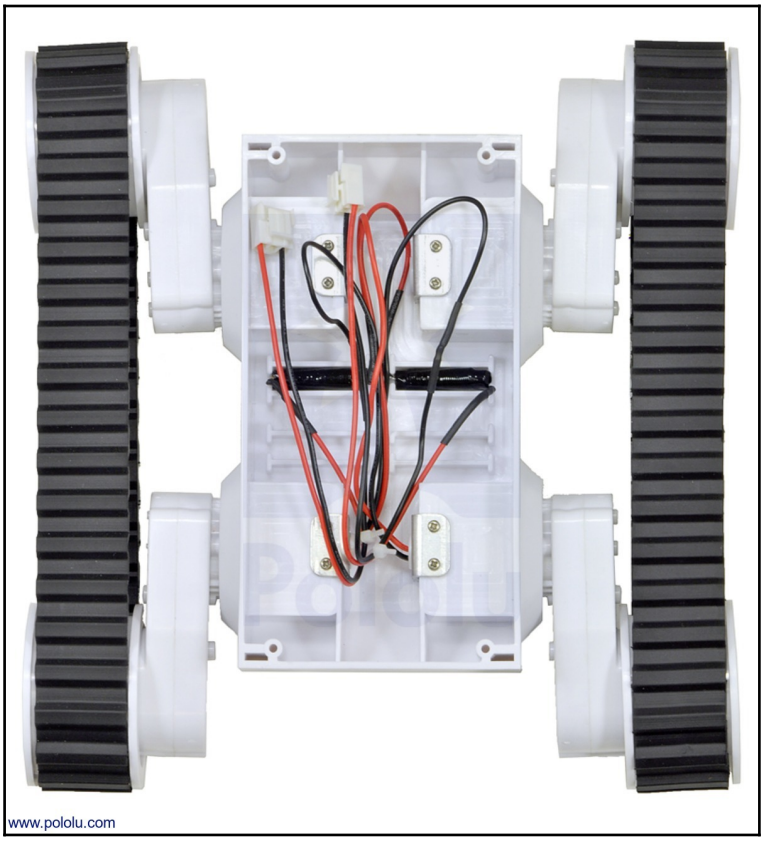

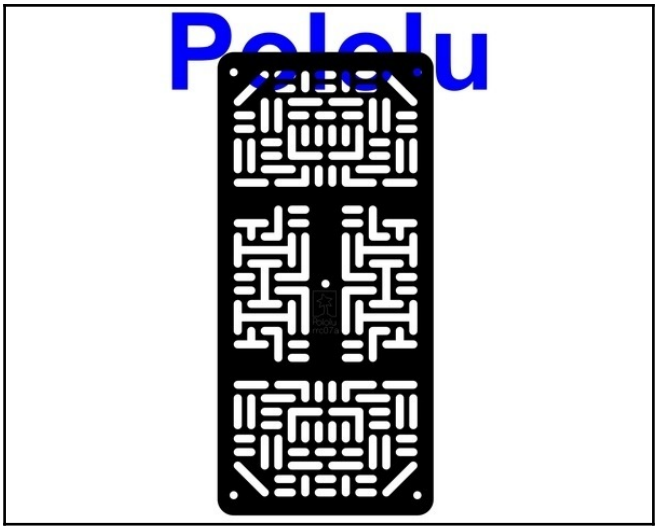
Pololu

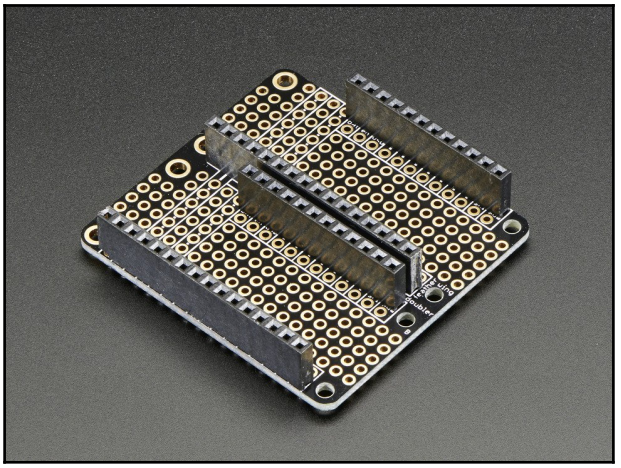

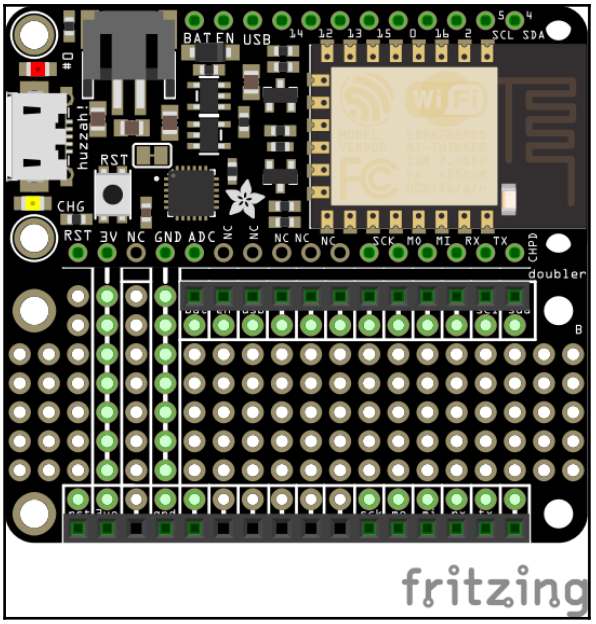
BAT EN USB
14 12 13 15 0 16 2
SCL SDA
huzzah!
RST
CHG
RST 3V NC GND ADC NC NC NC NC NC SCK MO MI RX TX
CHPD
doubler
fritzing

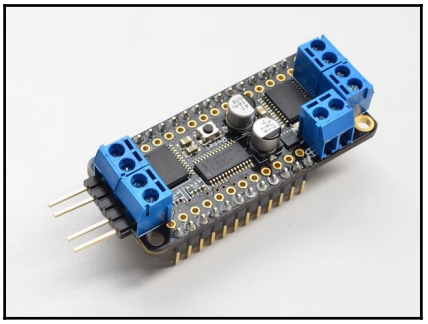

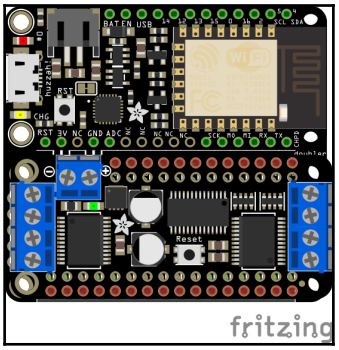
Reset
fritzing

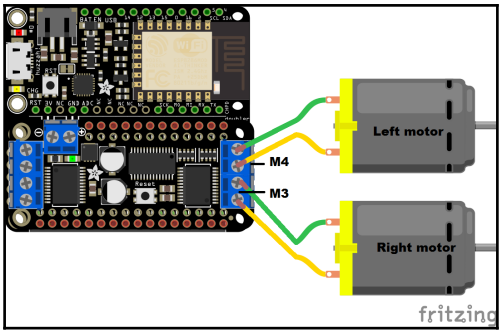
Left motor
M4
M3
Right motor
fritzing

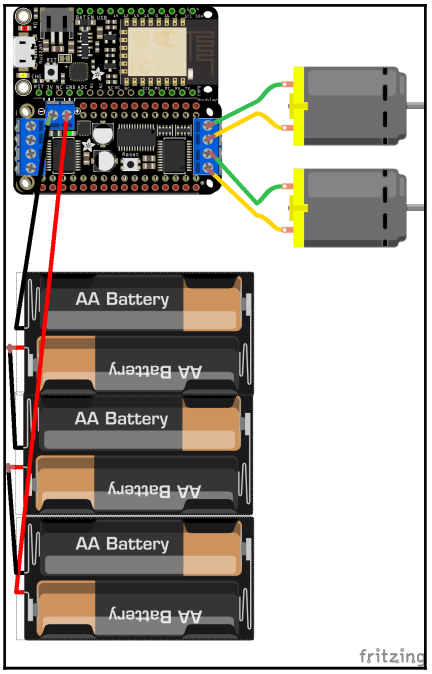
AA Battery
AA Battery
AA Battery
AA Battery
AA Battery
AA Battery
fritzing

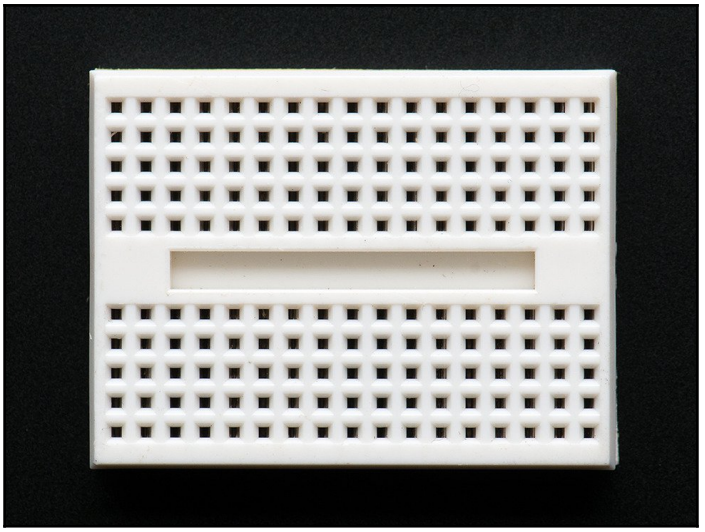

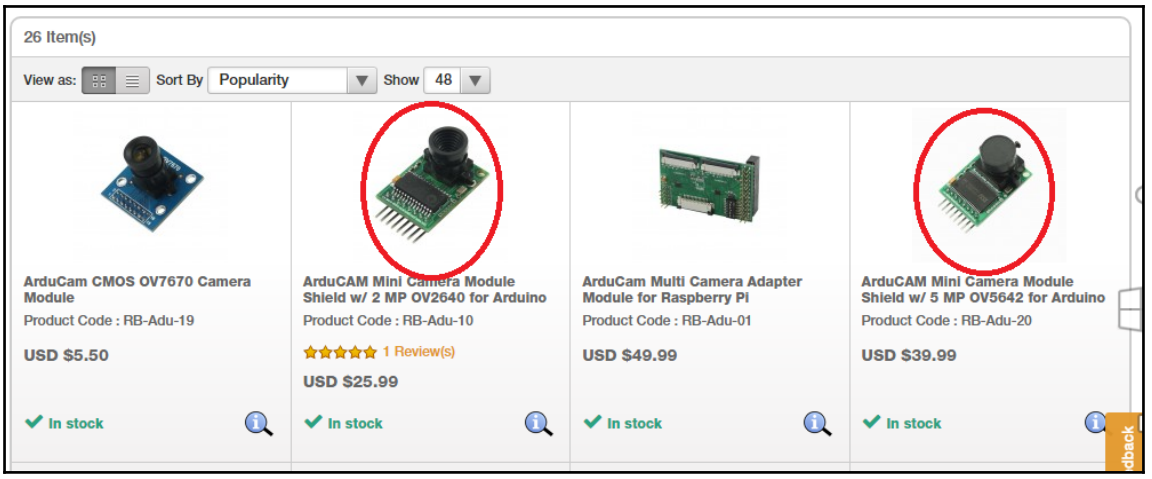
26 Item(s)
View as:
Sort By
Popularity
Show
48
ArduCam CMOS OV7670 Camera Module
Product Code : RB-Adu-19
USD $5.50
In stock
ArduCAM Mini Camera Module Shield w/ 2 MP OV2640 for Arduino
Product Code : RB-Adu-10
1 Review(s)
USD $25.99
In stock
ArduCam Multi Camera Adapter Module for Raspberry Pi
Product Code : RB-Adu-01
USD $49.99
In stock
ArduCAM Mini Camera Module Shield w/ 5 MP OV5642 for Arduino
Product Code : RB-Adu-20
USD $39.99
In stock

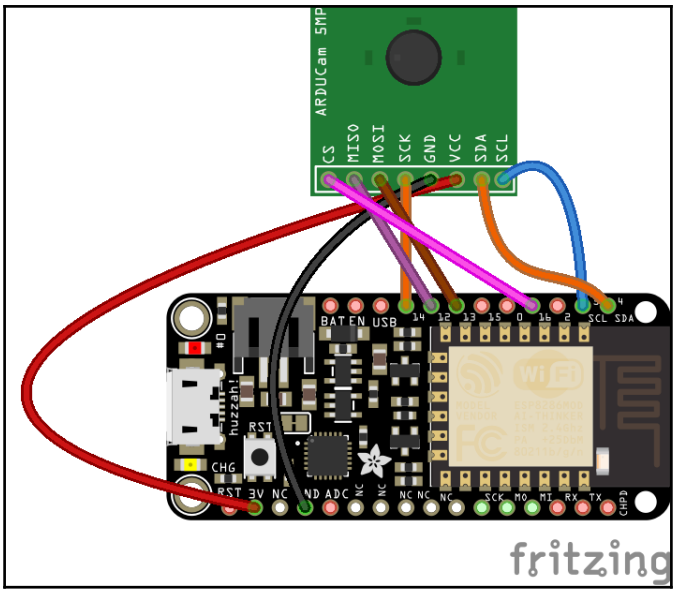
ARDUCam 5MP
CS
MISO
MOSI
SCK
GND
VCC
SDA
SCL
BAT EN USB
14 12 13 15 0 16 2 SCL SDA
RST
CHG
RST 3V NC ND ADC NC NC NC NC NC SCK MO MI RX TX GND
fritzing

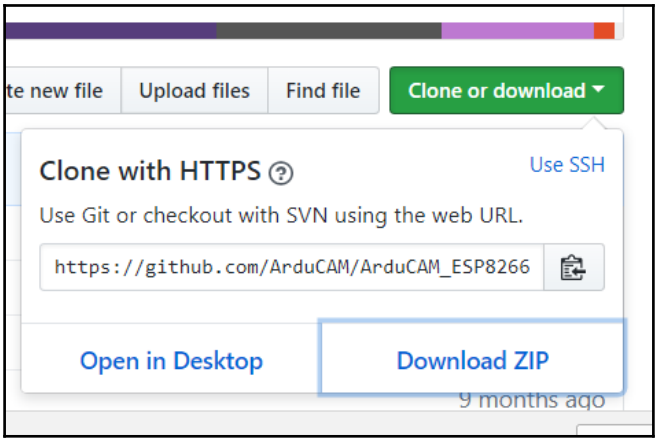
te new file
Upload files
Find file
Clone or download
Clone with HTTPS
Use SSH
Use Git or checkout with SVN using the web URL.
https://github.com/ArduCAM/ArduCAM_ESP8266
Open in Desktop
Download ZIP
9 months ago

This repository Search Pull requests Issues Marketplace Explore

sumotoy / ArduCAM

Watch 3 Star 5

Code Issues 7 Pull requests 0 Projects 0 Wiki Insights

Branch: master Find f

ArduCAM / examples / ESP8266 / ArduCAM_Mini_OV2640_websocket_server / ArduCAM_Mini_OV2640_websocket_server.i

sumotoy first commit 3ebf2cd c

1 contributor

222 lines (184 sloc) 4.73 KB Raw Blame History

```
// ArduCAM Mini demo (C)2015 Lee
// web: http://www.ArduCAM.com
// This program is a demo for ESP8266 arduino board.
// Publish captured image to a webpage.
//
// This demo was made for ArduCAM Mini OV2640 2MP Camera.
```

ArduCAM/camera_demo

GitHub, Inc. [US] https://github.com/sumotoy/ArduCAM/blob/master/examples/ESP8266/ArduCAM_Mini_OV2640_websocket_server/html/came

Code Issues 7 Pull requests 0 Projects 0 Wiki Insights

Branch: master

ArduCAM / examples / ESP8266 / ArduCAM_Mini_OV2640_websocket_server / html / camera_demo.html

sumotoy first commit

1 contributor

127 lines (98 sloc) 2.94 KB Raw

```
<!DOCTYPE html>

<!--[if lte IE 9 ]> <html class="ie"> <![endif]-->
<!--[if (gt IE 9)|!(IE)]><!--> <html> <!--<![endif]-->
```

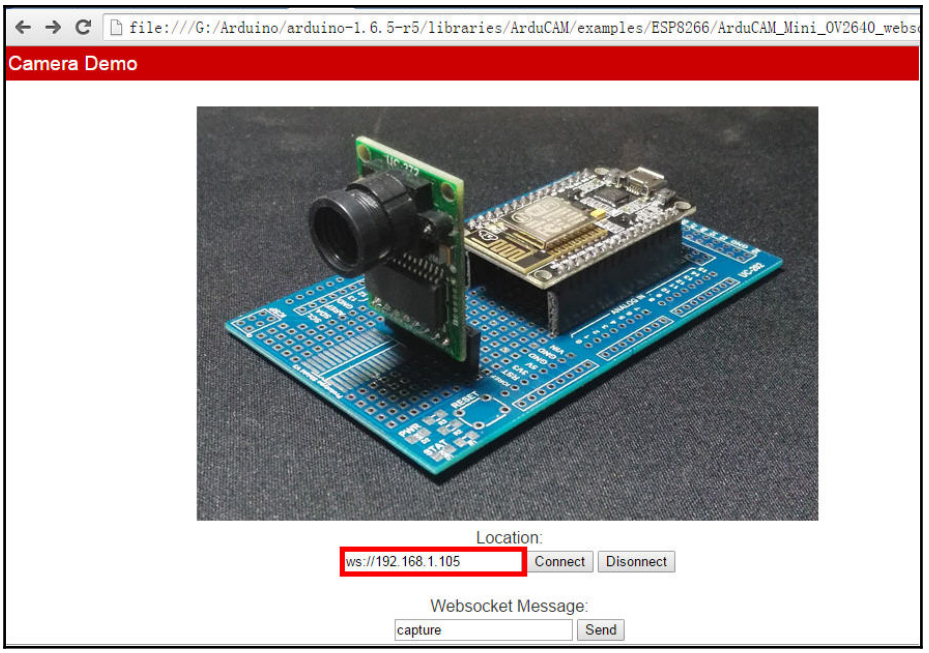
file:///G:/Arduino/arduino-1.6.5-r5/libraries/ArduCAM/examples/ESP8266/ArduCAM_Mini_OV2640_webs
Camera Demo
Location:
ws://192.168.1.105
Connect
Disonnect
Websocket Message:
capture
Send


file:///G:/Arduino/arduino-1.6.5-r5/libraries/ArduCAM/examples/ESP8266/ArduCAM_Mini_OV2640_websocket_server
Camera Demo
Location:
ws://192.168.1.105
Connect
Disonnect
Websocket Message:
capture
Send