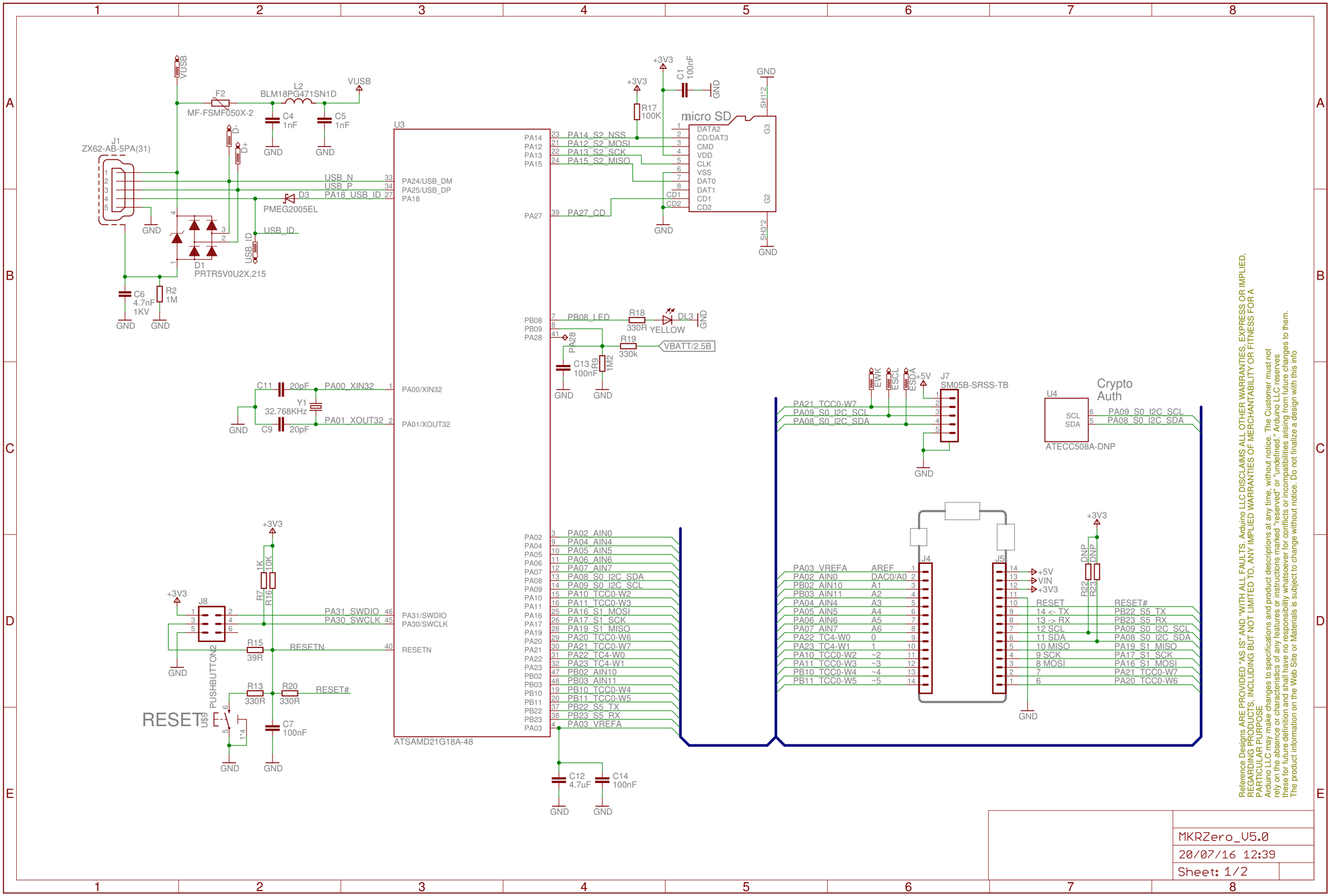
J1
ZX62-AB-5PA(31)
VUSB
F2
MF-FSMF050X-2
L2
BLM18PG471SN1D
C4
1nF
C5
1nF
GND
D-
D+
USB_N
USB_P
PA18_USB_ID
D3
PMEG2005EL
USB_ID
D1
PRTR5V0U2X,215
C6
4.7nF
1KV
R2
1M
U3
PA24/USB_DM
PA25/USB_DP
PA18
PA27
PA14_S2_NSS
PA12_S2_MOSI
PA13_S2_SCK
PA15_S2_MISO
PA27_CD
+3V3
R17
100K
C1
100nF
micro SD
DATA2
CD/DAT3
CMD
VDD
CLK
VSS
DAT0
DAT1
CD1
CD2
SH1*2
SH3*2
G3
G2
PB08_LED
R18
330R
YELLOW
DL3
R19
330k
VBATT/2.5B
C13
100nF
R9
1M2
PA28
C11
20pF
PA00_XIN32
Y1
32.768KHz
PA01_XOUT32
C9
20pF
PA00/XIN32
PA01/XOUT32
PA31_SWDIO
PA30_SWCLK
PA31/SWDIO
PA30/SWCLK
RESETN
R15
39R
R7
1K
R16
10K
J8
PUSHBUTTON2
R13
330R
R20
330R
RESET#
RESET
U$9
C7
100nF
ATSAMD21G18A-48
PA02_AIN0
PA04_AIN4
PA05_AIN5
PA06_AIN6
PA07_AIN7
PA08_S0_I2C_SDA
PA09_S0_I2C_SCL
PA10_TCC0-W2
PA11_TCC0-W3
PA16_S1_MOSI
PA17_S1_SCK
PA19_S1_MISO
PA20_TCC0-W6
PA21_TCC0-W7
PA22_TC4-W0
PA23_TC4-W1
PB02_AIN10
PB03_AIN11
PB10_TCC0-W4
PB11_TCC0-W5
PB22_S5_TX
PB23_S5_RX
PA03_VREFA
C12
4.7uF
C14
100nF
EWK
ESCL
ESDA
+5V
J7
SM05B-SRSS-TB
PA21_TCC0-W7
PA09_S0_I2C_SCL
PA08_S0_I2C_SDA
U4
Crypto
Auth
SCL
SDA
ATECC508A-DNP
J4
J5
PA03_VREFA
PA02_AIN0
PB02_AIN10
PB03_AIN11
PA04_AIN4
PA05_AIN5
PA06_AIN6
PA07_AIN7
PA22_TC4-W0
PA23_TC4-W1
PA10_TCC0-W2
PA11_TCC0-W3
PB10_TCC0-W4
PB11_TCC0-W5
AREF
DAC0/A0
A1
A2
A3
A4
A5
A6
+5V
VIN
+3V3
RESET
14 <- TX
13 -> RX
12 SCL
11 SDA
10 MISO
9 SCK
8 MOSI
7
6
RESET#
PB22_S5_TX
PB23_S5_RX
PA09_S0_I2C_SCL
PA08_S0_I2C_SDA
PA19_S1_MISO
PA17_S1_SCK
PA16_S1_MOSI
PA21_TCC0-W7
PA20_TCC0-W6
DNP
R22
R23
Reference Designs ARE PROVIDED "AS IS" AND "WITH ALL FAULTS. Arduino LLC DISCLAIMS ALL OTHER WARRANTIES, EXPRESS OR IMPLIED, REGARDING PRODUCTS, INCLUDING BUT NOT LIMITED TO, ANY IMPLIED WARRANTIES OF MERCHANTABILITY OR FITNESS FOR A PARTICULAR PURPOSE
Arduino LLC may make changes to specifications and product descriptions at any time, without notice. The Customer must not rely on the absence or characteristics of any features or instructions marked "reserved" or "undefined." Arduino LLC reserves these for future definition and shall have no responsibility whatsoever for conflicts or incompatibilities arising from future changes to them.
The product information on the Web Site or Materials is subject to change without notice. Do not finalize a design with this info
MKRZero_V5.0
20/07/16 12:39
Sheet: 1/2

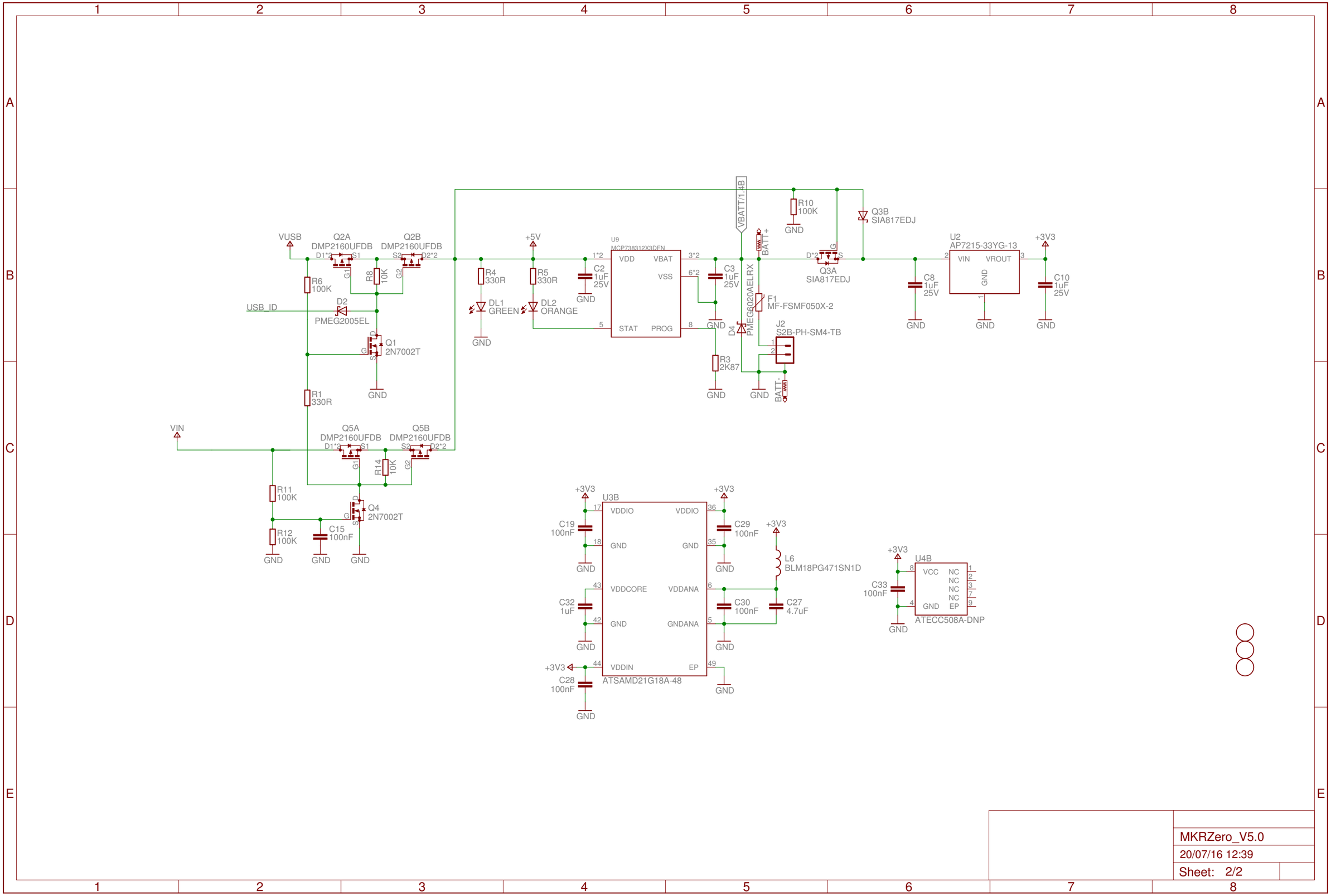

MKRZero_V5.0

20/07/16 12:39

Sheet: 2/2