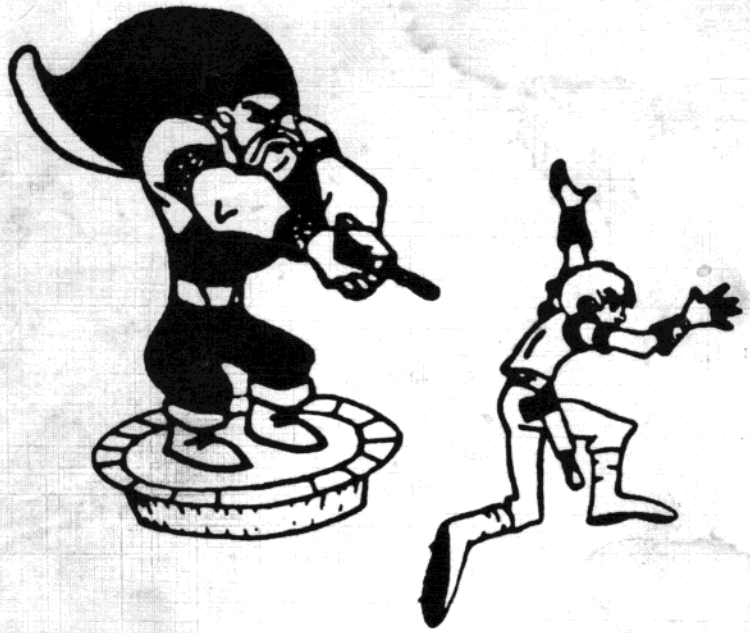

SPACE ACE™

CINEMATRONICS INCORPORATED

OPERATIONS/MAINTENANCE MANUAL

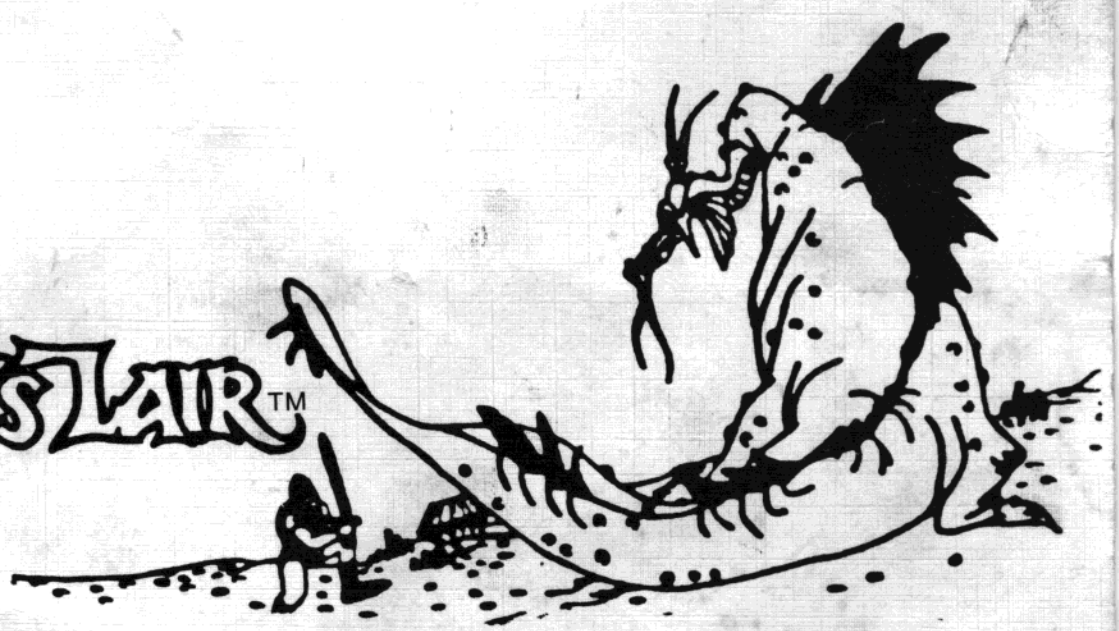

DRAGON'S LAIR™

WARNING

This equipment generates, uses, and can radiate radio frequency energy and if not installed and used in accordance with the instructions manual, may cause interference to radio communications. It has been tested and found to comply with the limits for a Class A computing device pursuant to Subpart J of Part 15 of FCC Rules, which are designed to provide reasonable protection against such interference when operated in a commercial environment. Operation of this equipment in a residential area is likely to cause interference in which case the user at his own expense will be required to take whatever measures may be required to correct the interference.

WARRANTY

Seller warrants the videodisc and the videodisc player for a period of thirty (30) days from date of shipment. Seller warrants that the video display, the power supply, and the printed circuit boards and parts thereon are free from defects in material and workmanship under normal use and service for a period of ninety (90) days from date of shipment. None of the Seller's other product parts are warranted.

If the products described in this manual fail to conform to this Warranty, Seller's sole liability shall be, at its option, to repair, replace, or credit Buyer's account for such products which are returned to Seller during said Warranty period if the following procedures are followed:

(a) Seller is promptly notified in writing upon discovery that said parts are defective.

(b) Such products are returned prepaid and accompanied with an RMA number to Seller's plant.

(c) Seller's examination of said products discloses to Seller's satisfaction that such alleged defects existed and were not caused by accident, installation, or improper testing.

In no event shall Seller be liable for loss of profits, loss of use, or incidental or consequential damages.

Except for any expressed Warranty set forth in a written contract between Seller and Buyer which contract supersedes the terms herein, this Warranty is expressed in lieu of all other warranties expressed or implied, including the implied warranties of merchantability and fitness for a particular purpose and of all other obligations or liabilities on the Seller's part, and it neither assumes nor authorizes any other person to assume for the Seller any other liabilities in connection with the sale of products by the Seller.

CUSTOMER SERVICE PROCEDURES
FOR AUTHORIZED CINEMATRONICS' DISTRIBUTORS

It is the desire of Cinematronics, Inc. to provide efficient and courteous service should the need arise. We have a fully staffed Customer Service Department and encourage you to call our toll free number: 800-854-2666. Our technicians are available to assist you between 7:00 a.m. and 5:00 p.m. California time, Monday through Friday. Parts may be ordered between 7:00 a.m. and 5:00 p.m., California time, Monday through Friday. PLEASE BE PREPARED TO GIVE THE SERIAL NUMBER OF THE GAME YOU ARE CALLING ABOUT.

In order to provide the best possible service, the following procedures for ordering or returning parts must be followed:

1. All equipment ordered from Customer Service, whether in or out of Warranty, must be placed with a Distributor's purchase order, either by mail or verbally by telephone.

2. Advance replacement items may be obtained only during the terms of the Warranty and when such items are available. Please be prepared to give the order desk the following information: THE GAME SERIAL NUMBER, THE WARRANTY ITEM SERIAL NUMBER, and your purchase order number.

3. All items received as advance replacements will, after a period of thirty (30) days, become the property of the Distributor, with applicable charges applied in the event that Customer Service has not received the defective item against which the advance replacement was made.

4. The Distributor must call this facility for an RMA number prior to returning any item. Please be prepared to provide us with the game serial number and part serial number when requesting an RMA.

5. In all situations covered above, and in all other situations, the Warranty offered by Cinematronics, Inc. is applicable and should be fully understood.

6. Parts returned for service must be packaged so that no damage is incurred during shipment. Do not pack players in shredded paper. Note that both models of the videodisc player should be kept in a horizontal position. UNDER NO CIRCUMSTANCES should a player be shipped for any distance in a non-level position. If a cabinet must be shipped in a non-upright position, remove the player and ship it separately. Cartons without a prominently displayed RMA number will not be accepted. Full documentation, including a game serial number, part serial number, and reason for return, must accompany all parts. Ship parts prepaid to:

Cinematronics, Inc.
Customer Service Department
1841 Friendship Drive
El Cajon, CA 92020
(619) 562-7000 or (800) 854-2666

TABLE OF CONTENTS

CHAPTER 1: General Information for Operators 1.1

Part I: Game Set Up 1.1
A. Warnings 1.1
B. RF Interference 1.1
C. Preliminary Examination 1.1

Part II: Game Operation 1.3
A. Power Requirements 1.3
B. Operator Controls 1.3
C. Videodisc Player Carriage Mechanism 1.3
D. Laser Disc Installation 1.4
E. Power Up 1.4
F. Coin Operation 1.4
G. Game Play and Player Controls 1.5

Part III: Periodic Maintenance Procedures 1.7

CHAPTER 2: Theory of Operation for the System Controller . . . 2.1

A. Z80 . . . . . 2.1
B. Data Bus Direction Control 2.1
C. Z80 Control Logic 2.2
D. Z80 Address Decoding 2.3
E. PROM Memory 2.3
F. RAM Memory 2.3
G. Real Time Clock 2.3
H. GI Sound Chip 2.4
I. Audio Amplifiers 2.4
J. Color Monitor 2.4
K. Power Supply 2.4
L. Audio Amplifier Power Supply 2.5
M. Player Interface 2.5
N. Disc Player Interface 2.5
O. Coin Counter 2.5
P. LED Display Board 2.6

CHAPTER 3: On-Board Diagnostics 3.1
A. RAM Test 3.1
B. EPROM Test 3.1
C. Security Device Test 3.2
D. Sound Test 3.2
E. Display Test 3.2
F. Keyboard Test 3.2
G. Color Test 3.2
H. Service Diagnostics and Signature Analysis 3.2

CHAPTER 4: Monitor and NTSC Decoder Board Supplement Info. . . 4.1
A. Electrohome NTSC Decoder Board Alignment Procedure 4.1
B. Wells-Gardner Color Monitor Setup Instructions . . 4.3
C. Wells-Gardner Composite Video Setup Instructions . 4.4

APPENDIX A: Parts List

APPENDIX B: Game Setting Options - Dragon's Lair

APPENDIX C: Game Setting Options - Space Ace

APPENDIX D: Schematics and Assembly Drawings

CHAPTER 1

GENERAL INFORMATION FOR OPERATORS

Part I: GAME SET UP

A. WARNINGS:

For safety and reliability, Cinematronics does not recommend or authorize any substitute parts or modifications of Cinematronics equipment. Such alterations may adversely affect game play, cause injury, or void Warranty. Substitute parts, modifications and non-Cinematronics game "conversions" may also void FCC compliance.

Cinematronics' games are protected by Federal copyright, trademark, and patent laws. Therefore, non-Cinematronics game "conversions" or game modules may be illegal under Federal law.

Both models of the videodisc player should be kept in a horizontal position at all times. If tilting is required during transport or repair, keep the period of inclination to a minimum.

The monitor's picture tube encloses a high vacuum and, due to the large surface area, is subject to extreme force. Take care not to bump or scratch the picture tube as this may cause the tube to implode, resulting in personal injury and property damage.

To prevent fire or shock hazard, DO NOT EXPOSE THE MONITOR TO RAIN OR MOISTURE.

B. RF INTERFERENCE

Cable harness placements and ground strap routing on this game have been designed to keep RF radiation and conduction within levels accepted by FCC regulations. To maintain these levels, reposition harnesses and reconnect ground straps to their original placements if they should be disconnected during maintenance.

C. PRELIMINARY EXAMINATION

Each game should undergo a brief inspection upon arrival to ensure that no damages occurred during shipping. The following list may be used as an inspection guideline:

1. Inspect the outside of the shipping carton. Damage to the outside carton may indicate damage to the game cabinet.

2. Unlock and set aside the back panel to check the circuitry. Reconnect any loose connectors. The connectors are keyed--do not force them together. Prevent damage to the PC boards by taking care not to reverse connectors.

3. Make sure that all socketed integrated circuits are firmly seated.

4. Unwrap the power cord supplied with the game, and plug it into the receptacle found on the rear of the cabinet. DO NOT PLUG THE GAME INTO THE WALL AT THIS TIME.

5. Observe the major subassemblies: monitor, control panel, transformer board, and power supply. All should be securely mounted.

6. Open the drawer at the bottom of the cabinet by removing the wing nuts and screws on the sides of the cabinet. Make sure that the videodisc player is securely mounted.

Part II: GAME OPERATION

A. POWER REQUIREMENTS

CAUTION: To prevent shock hazard and ensure proper game operation, plug this game into a properly grounded outlet: unless otherwise specified, your game was shipped to operate at 115 VAC, 60 hz. Do not use a cheater plug or cut off the ground pin to defeat the ground through the line cord.

B. OPERATOR CONTROLS

1. ON/OFF Switch: This switch is mounted on the rear of the cabinet next to the AC input receptacle. Pull the switch out to turn on the game. NOTE: Some newer games have no on/off switch. In these games use the power cord.

2. COIN COUNTER: Mounted on the operator convenience panel behind the coin door, this mechanism is software controlled and will count coins for Space Ace and credits for Dragon's Lair. If, for example, one game costs fifty cents, the coin counter increments once for every two coins.

3. VOLUME: Two volume controls, one for the left channel and one for the right, adjust the game's stereo sound.

4. RESET Switch: Located on the right side of the Z80 Controller board near the amplifier heat sinks, the RESET switch forces the Z80 and other registers on the board into their proper initial states and prevents the generation of unwanted sounds. See the Theory of Operation chapter of this manual for a more thorough explanation of this switch.

5. COVER-OPEN Switch: The left-most switch on the front panel of the disc player, this switch opens the cover of the disc player. Power must be on and the laser disc in reject position before this switch can operate.

6. DIPSWITCHES: For an explanation of the dipswitch settings, see appropriate Appendix.

C. VIDEODISC PLAYER CARRIAGE MECHANISM

The carriage mechanism on either disc player must be locked in place during shipping or moving. An unlocked carriage may result in disc player alignment problems.

Pioneer PR-7820: (Brown Player Enclosure)

After the game is in the desired location, unlock the carriage mechanism on the disc player by inserting a small flathead screwdriver into the hole just below the cover on the front-left side of the disc player. Turn the screw counterclockwise until it releases. The carriage mechanism is now free; the disc player ready to operate.

Pioneer LDV-1000: (Black Player Enclosure)

The locking screw for the carriage is located inside this player. After the game is in the desired location, momentarily turn the power on and press the COVER-OPEN switch to open the disc player cover. Located on the right side of the disc cavity is a large 3/8" flathead screw. Remove this locking screw and its washer plate, and save them, along with the lens cap, in the bag on the back door of the game cabinet. The disc player is now ready to operate.

ALWAYS SECURE THE CARRIAGE MECHANISM PRIOR TO SHIPPING OR MOVING THE GAME.

D. LASER DISC INSTALLATION

Turn the power on momentarily and press the COVER-OPEN switch to open the disc player. The cover should open as soon as the disc is in reject position.

Pioneer PR-7820:

Now turn the power off. Data-side (reflective) up, set the laser disc on the spindle of the player. Press the "Lock" buttons on the spindle to hold the disc in place. Close the cover of the disc player.

Pioneer LDV-1000:

Turn the power off. Data-side down, set the laser disc onto the spindle of the player. Close the cover of the disc player to automatically lock the disc in place.

DO NOT OPERATE EITHER DISC PLAYER UNTIL THE DISC IS LOCKED ONTO THE SPINDLE.

E. POWER UP

When the carriage mechanism is unlocked and the laser disc installed, replace the back panel and plug in the game. Either pull out the ON/OFF switch or use power cord to turn the power on. Three tones should be heard, about fifteen seconds apart. The first indicates that the laser disc is in reject position; the second that the laser disc has begun to play. If any or all of the tones are not heard, return to the beginning of this GAME OPERATION section and start over. NOTE: In some instances the initial beep is absent, please wait 15 to 20 seconds for the sound. In another 15 to 20 seconds you should hear a tone, at which time the display will appear.

F. COIN OPERATION

One credit = one single player game. The number of coins required for one credit is operator programmable. (See appropriate Appendix for Game Setting Options). Two or more credits initiate a

two player game. Credits are displayed in the LED display above the CRT monitor.

G. GAME PLAY AND PLAYER CONTROLS

1. DRAGON'S LAIR

a. GAME PLAY: Dirk the Daring enters the enchanted castle of an evil wizard to rescue Princess Daphne. As Dirk fights his way through the monsters and traps the wizard has set for him, he must find the secret passages which lead to the caverns below the castle. There, in a deep dungeon, the princess is held captive in a magic cage guarded by a gigantic Dragon. Dirk must ultimately slay this Dragon to free the princess.

Because the monsters and traps to be overcome are so numerous and constantly changing, it is not possible to list the range of scores awarded for each one. Generally, as Dirk progresses deeper into the castle, he encounters more difficult obstacles and is accordingly awarded greater numbers of points for overcoming them.

b. SWORD/ACTION BUTTON: Causes Dirk to draw and use his sword.

c. JOYSTICK: Controls Dirk's movements. Dirk moves in the direction that the joystick is pointed. In some instances, moving Dirk to an object causes him to do something with that object.

2. SPACE ACE

a. GAME PLAY: "Space Ace" features a cast of loveable and laughable characters which make promotion easy, exciting and fun.

One gallant earthling stands between the inter-planetary invasion forces of the blue-skinned alien Commander Borf and their intended target, Earth: an earthling named Dexter. On Dexter's narrow shoulders ride the fate of Earth and the well-being of his lovely sidekick, Kimberly, who Borf has carried off into the cosmos.

Dexter sets off in hot pursuit of Lord Borf, battling monsters, machines and mechanisms as he fights his way across the galaxy. During his daring quest, Dexter relies on his wits, agility and quick reflexes to overcome the deadly predicaments and bizarre opponents Borf throws in his path; but when the peril grows too great for even cunning and courage to prevail, Dexter has a secret strength in reserve.

Exposure to mysterious cosmic rays has given Dexter a remarkable ability. Just when our hero seems doomed and all appears lost, he undergoes a startling transformation into his super-mighty, super-bold, super-self: SPACE ACE! - a broad-shouldered, good-natured

alter ego who evens out the odds as Dexter struggles to rescue Kimberly.

Pursued to his home planet by this resourceful and relentless adversary, Borf turns and faces Dexter in a final and climactic confrontation. Determined to prevail at all costs, Borf resorts to the ultimate weapon, a weapon capable of reducing even the mighty Space Ace into a helpless infant: the dreaded INFANTO-RAY! Only Space Ace can survive such a crisis, and Space Ace alone can save the Earth, save the girl, and save the day!

b. ACTION BUTTON: The action button functions in a variety of ways in a variety of situations. Most frequently the Action button fires weapons and energizes Dexter into Space Ace.

c. JOYSTICK: The joystick controls the direction of movement of the Dexter and Space Ace characters.

PART III: PERIODIC MAINTENANCE PROCEDURES

Because of its solid state electronic circuitry, this game should require very little maintenance and only occasional adjustments. Several measures should, however, be taken to ensure as few problems as possible.

LASER DISC: The laser disc should be cleaned weekly with a soft cloth and an ammonia-based cleaning solution, e.g. a non-aerosol window cleaner. Do not use any cleaner containing alcohol. To prevent fingerprints and smudges, hold the laser disc by its edges.

FILTER AND SCREEN: Routinely inspect and, when needed, clean or replace the filter on the back of the cabinet and/or fan guard.

VIDEO MONITOR: Though the video monitor is properly adjusted before shipping, occasional minor adjustments may be necessary. Adjustment controls are located at the rear of the monitor. Do not attempt to modify any circuit on the monitor. See Chapter 4 for additional information on the monitor.

POWER SUPPLY: The power supply is also adjusted before shipping. The computer boards in this game operate most efficiently and reliably when the power supply is set so that the voltage on the board is +5V. To check this, place a meter across +5V and ground on the logic board. If necessary, adjust the screwdriver control on the power supply until the meter reads between 4.9 and +5V.

The game should be serviced only by qualified technicians. For service information, contact:

Cinematronics, Inc.
1841 Friendship Drive
El Cajon, CA 92020
(619) 562-7000
(800) 854-2666

ALWAYS BE PREPARED TO GIVE THE SERIAL NUMBER OF THE GAME YOU ARE CALLING ABOUT.

CHAPTER 2

THEORY OF OPERATION

FOR THE SYSTEM CONTROLLER

A. Z80

The microprocessor used in this system is a 4 MHz Z80. All of the Z80's address, data, and control outputs are buffered by bus drivers: U2, U9, U15, and U23. These buffers are always enabled.

B. DATA BUS DIRECTION CONTROL

A high Read signal RD- at U15-1 allows the Z80 to write into the RAMs and other external devices. A low RD- signal allows the transfer of data from the RAMs, ROMs, and other external devices to the Z80.

The Z80 generates sixteen address lines. After buffering, these lines are referred to as A0 through A15. A0 is the least significant bit, A15 the most significant.

Similarly, after buffering by data bus driver U15, the eight data bus lines are referred to as D0 through D7.

U23 buffers the following four control signals generated by the Z80:

SIGNAL		OCCURRENCE
M1-	MACHINE CYCLE 1	During instruction fetches.
MREQ-	MEMORY REQUEST	When the Z80 reads or writes data from or to memory-mapped devices.
RD-	READ	When the Z80 reads data.
WT-	WRITE	When the Z80 writes data.

NOTE: Bus Acknowledge signal BUSAK- may be wired on some boards, but it is never used.

C. Z80 CONTROL LOGIC

This section describes the generation of three control inputs to the Z80: CLOCK+, RESET-, and WAIT-. The control input Bus Request (BUSRQ-) may be wired on some boards, but it is never used.

1. CLOCK CIRCUIT

The Clock Circuit provides the Z80 Controller Board with a stable 4.00 MHz signal. This signal may be derived in one of three ways:

a. A TTL oscillator (U24,74LS04) producing 4 MHz directly.

b. A TTL oscillator (U24,74S04) producing 16 MHz, which is divided by 4 (U31,74LS74) to produce 4 MHz.

c. A transistor oscillator producing 8 MHz which is divided by 2 to produce 4 MHz.

The 4 MHz signal is used as the clock for the Z80 microprocessor. A 2 MHz clock for the GI sound chip is produced by dividing the 4 MHz system clock by 2 (U26,74LS74).

2. RESET CIRCUIT

The Reset Circuit forces the processor and other registers on the Z80 Board into their proper initial states and prevents the generation of unwanted sounds. The Reset Circuit is activated automatically at power up and manually by pressing the RESET button on the Z80 Controller Board.

The Power-up Reset Circuit is composed of CR1, CR2, R43, R44 C62, Q1, U23, pins 11 and 9, U22, pins 1 through 3.

At power up, the positive side of C62 is very close to 0 volts. This causes Q1 to be turned on and the output of the circuit, U23-9, to be high. C62 now begins to charge; i.e., the voltage on its positive side goes from ground to +5V. When the positive side of C62 reaches a potential of approximately 1.4 volts, Q1 turns on, forcing U23-9 low. To provide a clean output pulse at U23-9, the pulse width at U23-9 should be in excess of 50 milliseconds.

A Schmidt-Trigger device, U23 has built-in hysteresis. U22, pins 1 through 3 provide an active low RESET at U22-3.

When the RESET button is depressed, C62 de-charges, initiating the RESET Circuit activity described above.

3. WAIT LOGIC

When reading or writing to GI Sound Chip U19, the Z80 must wait for one Time State, or T-State. For circuit simplicity, a signal generated by U25-6 determines when these states need to be inserted. Sometimes active for other reasons, this signal is always active low whenever the GI Sound Chip is addressed.

The Wait Circuit for the GI Sound Chip is composed of U28 and U25, pins 1 through 6. A T-State is generated as follows:

The signal at U25-6 is fed to U28-2. U28 is configured as a 2-Bit shift register. Normally, U25-6 remains high, causing U28, pins 5 and 9 to be held high and WAIT signal at U25-3 to be high/inactive. When the GI Sound Chip is addressed, U25-6 drops low, causing U28-6 to go high, while U28-9 remains high. The WAIT signal then drops low for 250 ns or one T-State.

D. Z80 ADDRESS DECODING

Address decoding is performed by U4, U11, and U10. U4 decodes address lines 13, 14, and 15. The outputs of U4 select five different banks of ROM, one bank of RAM, and two banks of memory-mapped I/O devices. Each of these banks is 4K long. Address decoding at U4 is enabled when Memory Request signal MREQ+ is active high at U25-10. It is disabled during Refresh Cycles (RFSH-) by a low at U25-9.

U10 decodes address lines 3, 4, and 5. Its outputs are used to generate Write Strobes to memory-mapped I/O devices. Also used to decode address lines 3, 4, and 5, U11 generates Read Strobes for memory-mapped I/O devices.

E. PROM MEMORY

Located on the PROM board, PROM Memory U1 through U5 contain the program for the game.

F. RAM MEMORY

RAM Memory U3 stores the variables for the Z80 Controller Board. U3 = one 2K block of memory.

G. REAL TIME CLOCK

Interrupts occurring at a rate of approximately 33 milliseconds are required to keep the Z80 in sync with the videodisc player. The signal RTC+ (REAL TIME CLOCK) at U26-11 is a square wave with a 33 millisecond period. In early models, this signal is generated by the 68705, U7-12. In later models, U6 and U13 are cascaded to form a 16-Bit binary counter. The output of this counter circuit, U6-6 is a 33 millisecond square wave.

In either case, U26-8 is forced low every 33 milliseconds, thereby generating an interrupt signal to the Z80. When the Z80 recognizes the interrupt signal, it forces both M1- and the IORQ- signals low simultaneously, causing CLR INT- (CLEAR INTERRUPT) to go low at U25-11, thus removing the interrupt generated at U26-8.

H. GI SOUND CHIP

GI Sound Chip U19 generates the boops and beeps for the coin drop and joystick feedback.

Both address words and data words are written by the Z80 to the GI Sound Chip. However, only data words are read from the Sound Chip. Two control inputs on the Sound Chip control all reading and writing between the Z80 and the Sound Chip. When an address word is written into U19, the Write Address signal generated at U10-13 falls low at U22, pins 4 and 10, forcing both control inputs, pins 18 and 20 on U19 high. In a similar fashion, the Write Data signal at U22-5, and the Read Data signal at U22-9 are encoded at U22 to control data transactions between the Z80 and U19.

The GI Sound Chip's input/output ports A and B are always programmed as inputs and are used to read option switches SW1 and SW2.

I. AUDIO AMPLIFIERS

There are two audio channels on the disc player. U29 amplifies the sounds on Channel 1, U30 the sounds on Channel 2 and the sounds generated by GI Sound Chip U19.

J. COLOR MONITOR

The monitor used in this system is a standard R.G.B. monitor with a N.T.S.C. Decoder Board. 115V from the power supply's Isolation Transformer reach the monitor through a 2-pin flying lead. Video signals travel through a COAX cable from the videodisc. player to P103 of the monitor's NTSC decoder board.

See Chapter 4 for additional information on the monitor and the NTSC Decoder.

K. POWER SUPPLY

There are four versions of the power supply. All of the versions have outputs of +5V DC regulated and +25V unregulated power. The +25V is regulated down to +14V by the Z80 Controller for usage with audio amplifiers U29 and U30. All versions also output of 6.3V AC to the coin door lamps. Some version have -25V and other outputs that are not used.

NOTE: The first fuse on all versions (F1) should be a five-amp MDL, even if the white silkscreen markings on the PC board say otherwise. If a game appears to lose power, make sure that F1 is a five-amp MDL fuse.

L. AUDIO AMPLIFIER POWER SUPPLY

Composed of VR1, Q3, and other discrete components, the Audio Amplifier Power Supply circuit supplies approximately 14 volts to Audio Amplifiers U29 and U30. A 3-Terminal voltage regulator chip, VR1 is used to drive the base of Q3 with +15V. Q3 is configured as an emitter-follower. The output of the circuit is the emitter Q3. The voltage at the emitter of Q3 is normally 14.3V.

M. PLAYER INTERFACE

All player controls and the coin switches are read by the Z80 via input registers U8 and U14. All player control inputs are furnished with pull-up resistors and RC de-coupling networks.

N. DISC PLAYER INTERFACE

The disc player interface is composed of U20, U21, and U16. In games with Pioneer 7820 disc players, U16 feeds both the ENTER+ and the INT/EXT signals to the disc player. The signal OUT DISC DATA+ at U16-5 is fed to the output enable pin at U21-1. U21 is used to send control words to the disc player. U20 is not used with the 7820. Games with 7820 players should have board serial numbers below 6000.

In games with the Pioneer LDV-1000 player, the only signal sent to the player from the Z80 is the INT/EXT signal generated at U16-9. The ENTER+ signal is returned from the disc player and is fed to U14-6. U16-5, the output disc data signal, goes high, disabling U21, when the Z80 wishes to read data words form the disc player via U20. Games with LDV-1000 players should have board serial numbers above 6000.

O. COIN COUNTER

The mechanical coin counter is controlled by U16-2. When U16-2 is high or disabled, no base current is drawn thru Q2. (Q2 is the coin counter driver transistor). This keeps the coin counter de-energized. When the Z80 wishes to register a coin count, it will drop U16-2 low, thereby drawing base current through Q2, turning Q2 on, and bringing the collector of Q2 to approximately 4.7 volts. After a delay of at least 50 milliseconds, the Z80 will force U16-2 high.

To prevent false coin counts on power-up, U16-1 is connected to RESET+. This connection disables U16 until the program can start

running, forcing U16-2 high and de-energizing the coin counter.

P. LED DISPLAY BOARD

The LED display board is composed of two identical circuits. Each circuit has eight common anode displays and one multiplexer chip. The following is a description of one of these identical circuits.

The multiplexer chip has a memory of eight words, with four bits to each word. The Z80 writes into any location of this memory by setting appropriate highs and lows on address lines A0 through A2. The Z80 selects the character to be written into the memory by placing data on D0 through D3, thereby supplying a WRITE pulse to pin 8 of the multiplexer chip. Address lines A0 through A2 and data lines D0 through D3 are connected to the Z80's address and data bus by a 16-ribbon cable attached to the two boards. Display enable signals DEN 1 and DEN 2 are generated by address decoder U10, pins 7 and 9 on the Z80 Board.

CHAPTER 3

ON-BOARD DIAGNOSTICS

The on-board diagnostics are a series of tests performed on the system's hardware to verify whether or not the hardware is fully functional. Resident in the Z80A game program EPROM, the diagnostic software routines are initiated by appropriate option switch setting (see appropriate Appendix) when the game is powered up.

Once initiated, the diagnostic program cycles through the following tests. The results of these tests flash consecutively on the monitor display.

A. RAM TEST

Each RAM cell is loaded with 55H and read to insure that all of the cells retained the data. The RAM is then reloaded with 0AAH, which causes every bit in every cell to be inverted. The RAM is then read again to verify data retention. If all cells are operating properly, the diagnostics proceed to the EPROM Test. If a bad cell is found, the system displays "RAM test failed" on the monitor and halts until it receives a reset.

B. EPROM TEST

There are five 8K-byte EPROMs within the system. The Diagnostic program calculates each EPROM's checksum and compares it to pre-stored correct checksum values. If all of the checksums match, the program continues with the security device test. If an EPROM fails, the monitor displays the words "ROM test failed" and the address location of the bad EPROM. The correct address locations are listed in the following table:

Checksum no.	Address Location	EPROM Address
1	OFFF6H	0000H-1FFFH
2	OFFF8H	2000H-3FFFH
3	OFFFAH	4000H-5FFFH
4	OFFFCH	6000H-7FFFH
5	OFFFEH	8000H-9FFFH

C. SECURITY DEVICE TEST

May or may not be implemented. Please disregard.

D. SOUND TEST

The program outputs a tone scale to each of the three channels of the GI Sound Chip. Check the volume control while these sounds are playing. If no sound is heard, check the AY-3-8910 Sound Chip.

E. DISPLAY TEST

The seven segment Player 1 and Player 2 displays now cycle through all of their available digits; each display should progress through the numbers 0 through 9. No rating of PASS or FAIL appears on the monitor. Simply watch the displays themselves to ensure that they are operating properly.

F. KEYBOARD TEST

This test checks the operation of the player controls. During the fifteen-second period of the test, push all of the player control buttons and operate the joystick. One seven-segment display corresponds to each of the controls and to each direction of the joystick. Each time a control is operated, a zero should appear in its corresponding display. The monitor displays the diagram shown below, a table indicating which display corresponds to each control.

PLAYER 1 SCORE

	ACTION	RIGHT	LEFT	DOWN	UP

PLAYER 2 SCORE

P1	P2	COIN 1	COIN 2		

G. COLOR TEST

The program now displays the image of a dead Dirk or a color test pattern. Adjust the video monitor till the colors in this image are satisfactory. This image stays on the monitor until the diagnostic dipswitch is disabled.

H. SERVICE DIAGNOSTICS AND SIGNATURE ANALYSIS

A set of ten test EPROMs and documentation for their use in service diagnostics and signature analysis for the Z80 controller

board are available at an additional cost. The troubleshooting procedures using the test EPROMs assume a relatively advanced level of technical expertise and are, therefore, not included in this manual.

For information on purchasing a set of Diagnostic EPROMs, please contact Cinematronics' Customer Service Department.

CHAPTER 4

ELECTROHOME MONITOR AND NTSC DECODER BOARD SUPPLEMENT INFORMATION

NTSC DECODER BOARD ALIGNMENT PROCEDURE

PRELIMINARY

Set all six PCB controls to mechanical center except the sub-contrast (R107) which is set to the full clockwise position.

SET-UP:

1. Connect a composite video color bar signal at 1.0V pp to the PCB input at P101.

2. Adjust sub-contrast (R107) for maximum contrast with no overdrive. Overdrive appears as vertical white bars between the color bars, most noticeable between the yellow and cyan bars.

3. Adjust sub-brilliance (R130) until the black portion of the color bar pattern just turns black (raster just extinguished).

4. Critically adjust trimmer capacitor C124 to center of color lock-in range. It is a good idea to power PCB monitor off for a few seconds, then back on to ensure color lock.

5. Set chroma input level (R144) fully clockwise, then rotate slowly counterclockwise until color appears, then rotate counter-clockwise another 30-40 degrees.

6. Connect scope at 10 microsec/div (AC couple) to blue output (P103-6). Adjust L101(3.58 MHz trap) for minimum of 3.58 MHz carrier riding on video signal.

7. With scope at blue output, adjust sub-brilliance (R130) and contrast pre-set (R106) for a black level of 0.5 volts and a peak white level of 4.0 volts respectively.

8. With scope at blue output, adjust sub-color (R139) so that the peak level for the grey bar and the peak level for the blue bar are equal.

9. Connect the scope to the green output (P103-5) and adjust the sub-tint so that the peak level for the cyan bar and the peak level for the green bar are equal.

10. If necessary, re-adjust the contrast pre-set (R106) for a peak white level of 4.0 volts (3.5V above black level).

NOTE: All of the preceding information is taken directly from ELECTROHOME ELECTRONICS' Service and Operation Manual: G07-19" R.G.B. Colour Monitor, January 1981, and from ELECTROHOME ELECTRONICS' Supplement Service Data: NTSC Decoder, July 1983.

WELLS-GARDNER

COLOR MONITOR SETUP INSTRUCTIONS

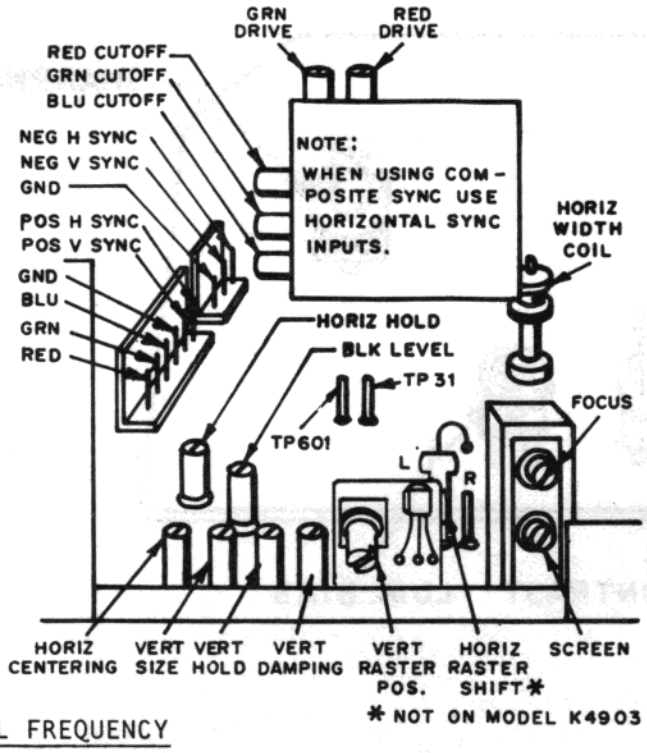

69X1251-100

K4901	K4951
K4902	K4952
K4903	K4956
K4906	K4956R
K4911	K4961

1. HORIZONTAL FREQUENCY

With the monitor being driven from the game signal, connect a jumper between TP601 and TP31. Adjust the horizontal hold control until picture stops sliding horizontally, remove jumper. Do not use the horizontal hold control for horizontal centering. (See #3) NOTE: When game sync is composite, use horizontal sync input.

2. PICTURE SIZE

Adjust the vertical size control, and the horizontal width coil for desired picture size.

3. PICTURE CENTERING

If the video is off center vertically, turn the vertical raster positior control to move the raster up or down. If the video is off center horizontally adjust the horizontal video position (Horiz. Centering) control to center the picture. If any additional horizontal positioning is required, move the horizontal raster position adjustment jumper (Horiz. Raster Shift) to the left or the right position.

4. VERTICAL DAMPING

Adjustment of this control is required only if the monitor is being used with a game in which the top several raster lines are visible on the screen. Adjust the vertical damping control for uniform spacing of the top raster lines.

5. BLACK LEVEL

Adjust the black level control to obtain the proper black level (the black portion of the picture just extinguished). Do not use the screen control to set the black level.

6. FOCUS

Adjust the focus control for best overall definition and fine picture detail.

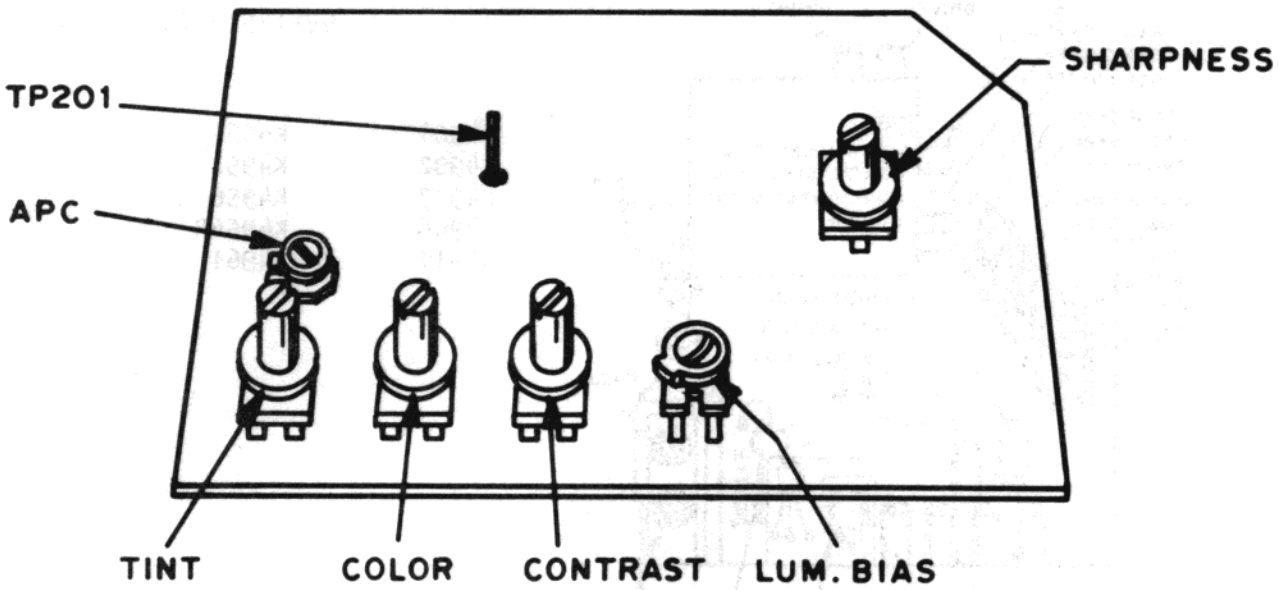

APC Adjustment

This adjustment should be made only when the Chroma IC (IC201), parts of the APC circuit have been replaced, or when the picture colors are unstable.

Procedures:

1. Apply a color bar signal to the Video Input Terminal.
2. Turn the Color Control fully clockwise and position the Tint Control at its mechanical center.
3. Connect a jumper between TP201 and ground.
4. Turn the APC Adj. Control VR201 until the color bars on the screen are synchronized.
5. Remove jumper.

Luminance Bias Adjustment

This is a factory adjusted control and should require no further attention. If however, it becomes necessary the procedure is as follows:

1. Connect a D.C. oscilloscope to one of the video outputs.
2. Turn the lum. bias control fully counter-clockwise.
3. Slowly turn the control in the clockwise direction until the black level is just at the sync tips. The sync appears just fully compressed.

APPENDIX A

PARTS LIST

Part numbers for the major assemblies (e.g. circuit board, control panel, etc.) are prefixed by 38-. The components used in making up an assembly are listed directly beneath that assembly.

For assistance or additional information,please call Cinematronics, Inc. (619)562-7000 or (800)854-2666.

Part Number	Part Description
38-12158-01	Laser Disc Player, LD-V1000
38-12127-01	Laser Disc Player, PR7820
25-12030-02	Shock Isolator
20-10868-12	Bracket, Drawer
01-11965-01	Air Filter
20-10873-01	Bracket, Air Filter
41-11926-01	Conn, 2 Cir Plug Molex #19-09-20
35-10614-01	Pin, Male, Molex
02-12092-01	Video Disc, Dragon's Lair
38-11863-01	Monitor, 19" NTSC Color
81-12057-01	NTSC Decoder Board, Electrohome
81-12057-02	NTSC Decoder Board, Wells-Gardner
81-12036-01	PCA, Display
44-12054-01	IC, ICM7218D
65-11533-01	LED, MAN8940
63-10784-01	Cap,.1MF 50V Disc 20%
63-11042-01	Cap, 470MF 35V Elec
41-10652-01	Conn, 16 Cir, M Header
80-12036-01	PCB, Display
36-11547-01	Socket, Dip 28Cir
38-12065-01	Assy, Cntl Panel, Dragon's Lair
20-11972-01	Cntrl Panel, Dragon's Lair
22-12066-01	Decal, Lexan, Dragon's Lair Control Panel
37-11192-01	Button, Short, White
37-11192-02	Button, Short, Red
37-11373-01	Switch, W/Plastic Mntg Brkt, Short
38-11396-01	Assy, Joystick, 8 Pos, Leafswitch
87-11679-11	Assy, Harness, Cntl Panel
38-12088-01	Assy, Circut Panel, Magicom
81-12035-01	PCA, Main Board
44-11833-01	IC, Z80A (4 MHZ)
44-11486-01	IC, 74LS244
44-11487-01	IC, 74LS245
44-11890-01	IC, 4016(200NS)
44-11029-01	IC, 74LS138
44-12053-01	IC, AY-3-8910 (GI)

69-12064-01	Crystal, 4 MHZ, Fundamental
37-12050-01	Switch, Dip 8POS
37-11535-01	Switch, Pushbutton, 39-251-Red
44-11028-01	IC, 74LS74
44-10700-01	IC, 74SO4
44-10677-01	IC, 74LS00
44-11492-01	IC, 74LS374
44-10697-01	IC, 74LS393
44-10680-01	IC, 74LS08
44-12055-01	IC, LM383 (NS)
20-10521-01	Heat Sink, Thermalloy 6072B
20-10520-01	Heat Sink, Thermalloy 6071B
44-10673-01	IC, 7815-C
66-10816-01	Transistor, NPN 2N3904
66-10817-01	Transistor, PNP 2N3906
66-10823-01	Transistor, NPN 2N5878
20-10537-01	Heatsink, Thermalloy 6060
65-10993-01	Diode, lN914
65-10812-01	Diode, lN4003, ENCPL
69-11898-01	Crystal, 16MHZ Fundamental
53-10743-01	Res, 4.7K OHM 1/4W 5% C.
53-10746-01	Res, 10K OHM 1/4W 5% C.
53-11123-01	Res, O OHM 5% C.
53-11684-01	Res, 220 OHM 1/4W 5% C.
53-10734-01	Res, 1K OHM 1/4W 5% C.
53-10731-01	Res, 330 OHM 1/4W 5% C.
53-10920-01	Res, 5.1K OHM 1/4W 5% C.
53-11044-01	Res, 510 OHM 1/4W 5% C.
53-12115-01	Res, 2.2 OHM 1/4W 5% C.
53-10771-01	Res, 360 OHM 1W 5% C.
53-10735-01	Res, 1.5K OHM 1/4W 5% C.
53-10730-01	Res, 300 OHM 1/4W 5% C.
63-11128-01	Cap, 22MF 50V Elec RAD
63-11042-01	Cap, 470MF 35V Elec
63-12129-01	Cap, 330PF 50V Disc 20%
63-11370-01	Cap, 10MF 50V Elec
63-12130-01	Cap, O.2MF 50V Ceramic Disc, 20%
63-11127-01	Cap, 1.0MF 50V Elec RAD
63-10784-01	Cap, .1MF 50V Disc 20%
63-10944-01	Cap, 100MF 35V Elec RAD
63-10940-01	Cap, .001MF 50V Disc 20%
63-10781-01	Cap, 005MF 50V Disc 20%
41-10652-01	Conn, 16 Cir, M Header
41-11895-01	Conn, 40 Cir, M Header
36-10621-01	Socket, 24 Pin, I.C., Dip Solderta
36-11784-01	Socket, 40 Pin Diptail
41-12113-01	Conn, 36 Pin Body Molex
41-12114-01	Pins, Solder, Molex
80-12035-01	PCB, Main Logic
81-12056-01	PCA, ROM
02-12091-01	EPROM, 2764,250 NS,U1, Dragon's Lair
02-12091-02	EPROM, 2764,250 NS,U2, Dragon's Lair

02-12091-03	EPROM, 2764,250 NS,U3, Dragon's Lair
02-12091-04	EPROM, 2764,250 NS,U4, Dragon's Lair
02-12091-05	EPROM, 2764,250 NS,U5, Dragon's Lair
63-11042-01	Cap, 47OMF 35V Elec
63-10784-01	Cap, .1MF 50V Disc 20%
41-11895-01	Conn, 40 Cir, M Header
36-11547-01	Socket, Dip 28Cir
80-12056-01	PCB, ROM
20-12092-01	Plate, Circut Mounting
87-12093-01	Assy, R. CBL. 40Cir 3"
05-12092-01	Set of Rev. C EPROMS (Speed Up Kit)
38-11701-01	Assy, Power Plate
20-11606-01	Plate, Mntg, P/S, Trans
38-11723-01	Assy, Trans ISOL Ravenswood
43-11704-01	Trans, ISOL Ravenswood 105P9
87-11767-01	Assy, Harn, Trans GND
82-10842-30	P/S, Data Power
82-10842-01	P/S, National
87-11688-01	Assy, Harn Trans/Mon JG
87-11768-01	Assy, Harn Trans/PS
38-12080-01	Assy, Operator Convenience Panel
20-12078-02	Brkt, Operator Convience Pnl
26-10589-01	Knob, Volume
29-11754-01	Meter, Coin 6 Volt
51-10722-01	POT, W.LK. Washer/Nut, 10K OHM
65-10812-01	Diode, 1N4003, ENCPL
87-12084-01	Assy, Harness Operator Convenience Panel
38-12081-01	Assy, AC Input Panel
20-12093-01	Plate, AC Input Panel
37-10893-01	Switch, Interlock
63-12131-01	Filter, AC Line, GCM3N1P (Genisco)
38-11704-01	Assy, Coin Door
20-10896-11	Coin Door W/Lamps
22-10899-01	Decal, "CINEMATRONICS"
87-11680-02	Assy, Harness, Coin Door
32-12100-03	Cabinet, Upright, DL, LD-V1000
38-12071-01	Assy, Marqee, Dragon's Lair
21-12069-01	Plexi, Marquee
22-12098-01	Decal, Lexan, Marquee, Dragon's Lair
20-12066-01	Retainer, Upper Marquee
20-12067-01	Retainer, Lower Marquee
21-10831-02	Bezel, CRT, Formed, DL
21-12138-01	Plexi, Rear, Score, Dragon's Lair
21-12139-01	Plexi, Monitor, Dragon's Lair
20-11382-01	Grill, Speaker
71-10834-01	Speaker
20-11420-01	Rail, CRT Mntg.
20-10862-01	Brkt, Coin Box Tong
20-10864-01	Handle, Coin Box
20-10871-01	Coin Box

20-10872-03	Cover, Coin Drawer
01-10505-01	Lamp, Fluorescent
26-10588-01	Fixture, Lamp, Fluorescent
87-12139-01	Assy, Main Harness
87-12140-01	Assy, Player Interface
87-12141-01	Assy, Cable, Display
87-12143-01	Power Cord
87-12142-01	Cable, BNC to BNC
01-11963-01	Fan, Muffin, 50 CFM
01-11964-01	Fan Guard, Muffin, Filter
22-12099-01	Decal, Side, Dragon's Lair
21-12140-01	Plexi, Film Smoked, 6 1/2 X 8 1/2

APPENDIX B

GAME SETTING OPTIONS - DRAGON'S LAIR

DIPSWITCH SPECIFICATION:

The following game options are controlled by Dipswitches 1 and 2 on the main CPU board:

I. Attract Mode and Joystick Sound
II. Number of Coins Required for One Credit
III. Number of Dirks per Credit and Length of Play
IV. Playtest and Diagnostic
V. Difficulty Level
VI. Pay-As-You-Go Play

Some options are controlled by individual switch settings, others by combinations of switch settings. Points B0 through B7, marked in white on the PC board, correspond to switches 1 through 8 respectively on Dipswitch 1. Points A0 through A7 correspond to switches 1 through 8 respectively on Dipswitch 2. BEFORE ADJUSTING SWITCHES, TURN POWER OFF AND UNPLUG POWER CORD.

A. ATTRACT MODE AND JOYSTICK SOUND

POINT	POSITION	FUNCTION
B0	OFF	Sound on every 8th attract mode sequence.
B1	OFF	No sound during attract mode sequences.
B3	OFF	Joystick feedback sound on.

B. NUMBER OF COINS REQUIRED FOR ONE CREDIT

NOTE: one credit = one game

SWITCH COMBINATION		NUMBER OF COINS REQUIRED FOR ONE CREDIT
A1	A0	
ON	ON	2
ON	OFF	3
OFF	ON	4
OFF	OFF	Not used

C. NUMBER OF DIRKS PER CREDIT AND LENGTH OF PLAY

POINT	POSITION	NUMBER OF DIRKS PER CREDIT
A5	ON	3
A5	OFF	5
B2	OFF	Unlimited Dirks for testing purposes.
A4	OFF	2 credits at all times/free play.

D. PLAYTEST AND DIAGNOSTIC

POINT	POSITION	FUNCTION
A3	OFF	Playtest Switch for engineering use.
A7	First ON, then OFF.	Diagnostics. To run diagnostics, set A7 to the ON position, and power up the game. Wait until you hear two beeps. The second beep indicates that the disc player has been initialized. After the second beep, turn A7 to OFF, and run diagnostics. To rerun diagnostics, press the RESET button, Sw 3 on the PC board.

E. GAME DIFFICULTY LEVELS

SWITCH COMBINATION			
A2	B4	B7	DIFFICULTY LEVEL
ON/OFF	ON/OFF	OFF	Easy
ON	OFF	ON	Difficulty is dependent upon player's ability. Easy at the onset of every game, play automatically increases in difficulty when a player survives 9 consecutive sequences of challenges.
ON	ON	ON	Difficulty is dependent upon player's ability. Easy at the onset of every game, play automatically increases in difficulty when a player survives 5 consecutive sequences of challenges.
OFF	ON	ON	Hard.

F. PAY-AS-YOU-GO PLAY OPTIONS

SWITCH COMBINATION					
A0	A1	A6	B5	B6	OPTION
ON/OFF	ON/OFF	ON	ON/OFF	ON/OFF	Pay-as-you-go setting is off. A specific number of coins must be deposited before game play begins. Game then plays from start to finish without interruptions.
ON	ON	OFF	ON	ON	Game play stops once, 2/3 of the way to the dragon's lair. At this time, the player must deposit more money if he wishes to continue. After the required amount of money is deposited, play resumes from the the interruption point. If the player has less than three Dirks at the point of interruption, he receives one additional Dirk when play resumes. In this option, the game ends when the player finishes the dragon's lair sequence.
ON	ON	OFF	ON	OFF	Game play stops once, 2/3 of the way to the dragon's lair. At this time, the player must deposit more money if he wishes to continue. After the required amount of money is deposited, interruption point.

					The player receives no additional Dirks in this option. The game ends when the player finishes the dragon's lair sequence.
ON	ON	OFF	OFF	ON	Game play stops at three regular intervals. At each pause, the player must deposit more money if he wishes to continue. After the required amount of money is deposited, play resumes at the interruption point. If the player has less than 3 Dirks at a point of interruption, he receives on additional Dirk when play resumes. In this option, the game does not end after the dragon's lair sequence. Instead, after the dragon's lair sequence, the player may deposit additional coins to prolong play. Play begins again at the first sequence. (No extra Dirks are awarded after the dragon's lair sequence).
ON	ON	OFF	OFF	OFF	Game play stops at three regular intervals. at these times, the player must deposit more money if he wishes to continue. After the required amount of money is deposited, play resumes at the interruption point.

In this option, the player receives no additional Dirks at any time. The game does not end after the dragon's lair sequence. Instead, after the dragon's lair sequence, the player may deposit additional coins to prolong play. Play begins again at the first sequence.

APPENDIX D

SCHEMATICS AND ASSEMBLY DRAWINGS

ORDER OF APPEARANCE	NO. OF PAGES
1. Z80 Controller Board Schematic Revisions	2
2. Z80 Controller Board Schematics Rev. E	2
3. Z80 Controller Board Assembly Rev. A	1
4. Z80 Controller Board Schematics Rev. K	2
5. Z80 Controller Board Assembly Rev. G	1
6. Magicom ROM Schematic	1
7. Magicom ROM Assembly	1
8. Magicom Display Schematic	1
9. Magicom Display Assembly	1
10. Condor Power Supply Schematic	1
11. Data Power Supply Schematic	1
12. National Power Supply Schematic (old)	1
13. National Power Supply Schematic (new)	1
14. Electrohome R.G.B. Monitor Schematic	1
15. Electrohome N.T.S.C. Decoder Schematic	1
16. Electrohome N.T.S.C. Decoder Specifications	1
17. Wells-Gardner R.G.B. Monitor Schematic	1
18. Wells-Gardner N.T.S.C. Decoder Schematic	1
19. Magicom Wiring Harness	2
20. Annunciator Board (Conversion Kit) Schematic	1
21. Annunciator Board (Conversion Kit) Assembly	1
22. Annunciator Board (with Lamps) - Schematic	1
23. Annunciator Board (with Lamps) - Assembly	1

PROPRIETARY
THIS DOCUMENT IS THE PROPERTY OF CINEMATRONICS INC. AND IS NOT TO BE REPRODUCED OR DISTRIBUTED WITHOUT WRITTEN AUTHORIZATION OF CINEMATRONICS INC

REVISIONS

REV	DESCRIPTION	DATE	APPROVED

J2 TO DISPLAY

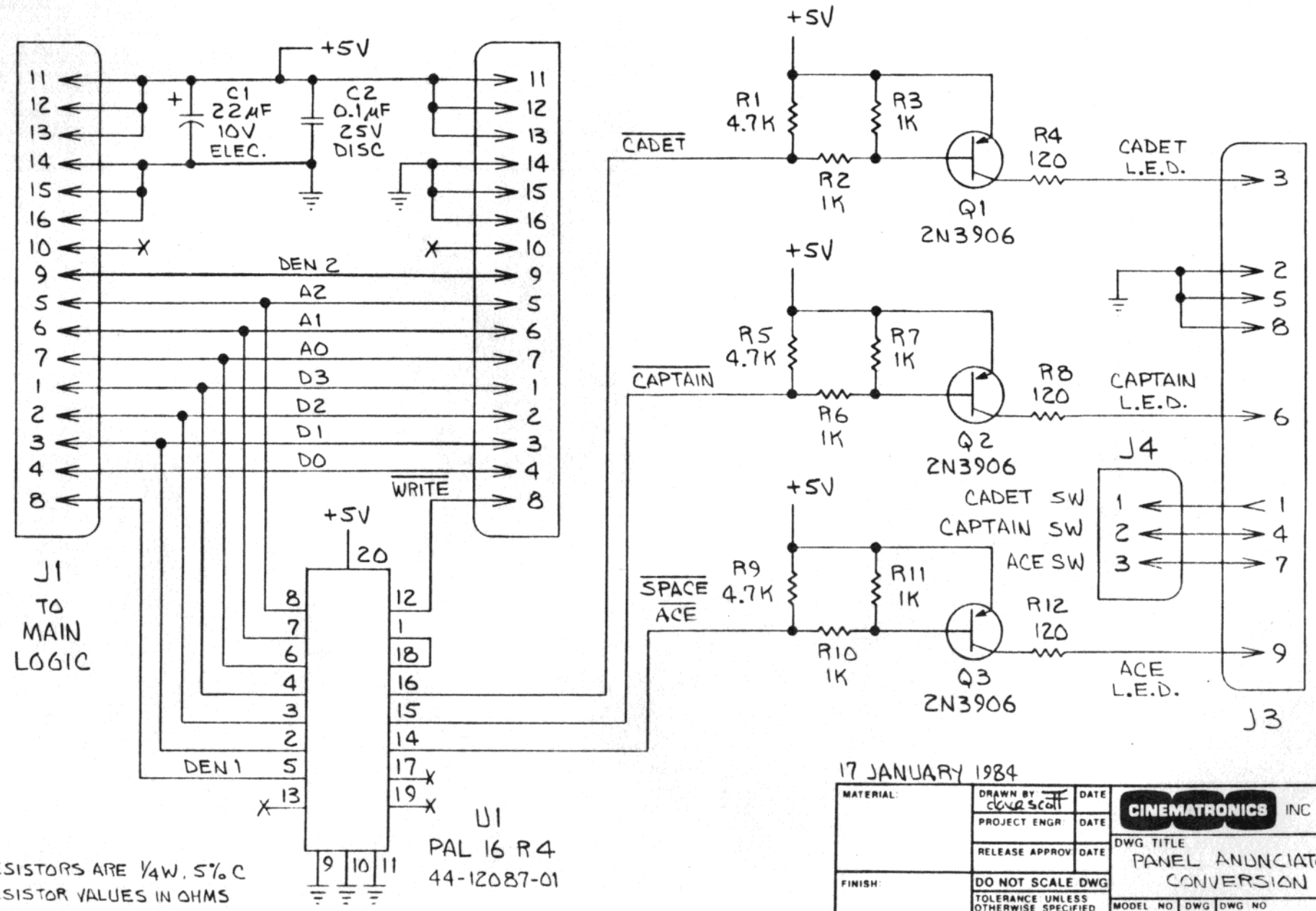

2. RESISTORS ARE 1/4W, 5% C
1. RESISTOR VALUES IN OHMS

NOTES: UNLESS OTHERWISE SPECIFIED

17 JANUARY 1984

MATERIAL:	DRAWN BY clever scott / DATE	CINEMATRONICS INC	El Cajon Ca 92020
	PROJECT ENGR / DATE	DWG TITLE: PANEL ANUNCIATOR CONVERSION	
	RELEASE APPROV / DATE		
FINISH:	DO NOT SCALE DWG		
	TOLERANCE UNLESS OTHERWISE SPECIFIED	MODEL NO	DWG SIZE C / DWG NO 72-12079-01 / REV A
	PROJECTION / SCALE	CODE IDENT	SHEET 1 OF 1

APPLICATION		REVISIONS			
NEXT ASSY	USED ON	APPROVED	DATE	DESCRIPTION	REV

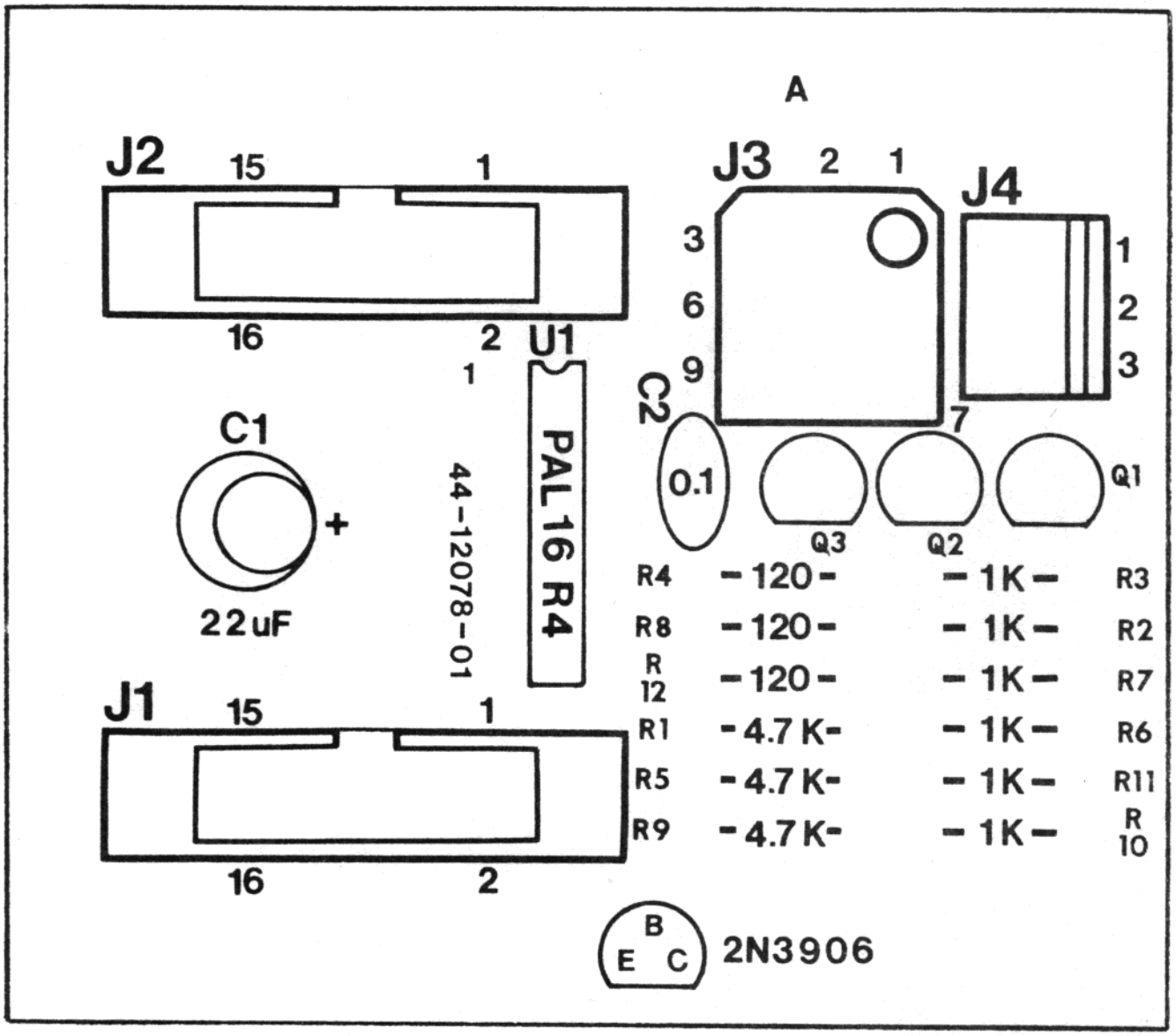

UNLESS OTHERWISE SPECFIED, DIMENSIONS ARE IN INCHES. TOLERANCES ARE: FRAC. + DEC. .XX± .XXX± ANGL. ±	APPROVALS	DATE
	BY davescott	1.28.84
	CHK	
	APPD	
	APPD	
	APPD	
MATERIAL		
FINISH		
DO NOT SCALE DWG		

CINEMATRONICS INC. El Cajon Ca. 92020

PANEL ANNUNCIATOR BOARD CONVERSION

SIZE	DRAWING NUMBER	
A	REV A	81-12079-01

SCALE 2:1 SHEET 1 OF 1

PROPRIETARY
THIS DOCUMENT IS THE PROPERTY OF CINEMATRONICS INC. AND IS NOT TO BE REPRODUCED OR DISTRIBUTED WITHOUT WRITTEN AUTHORIZATION OF CINEMATRONICS INC.

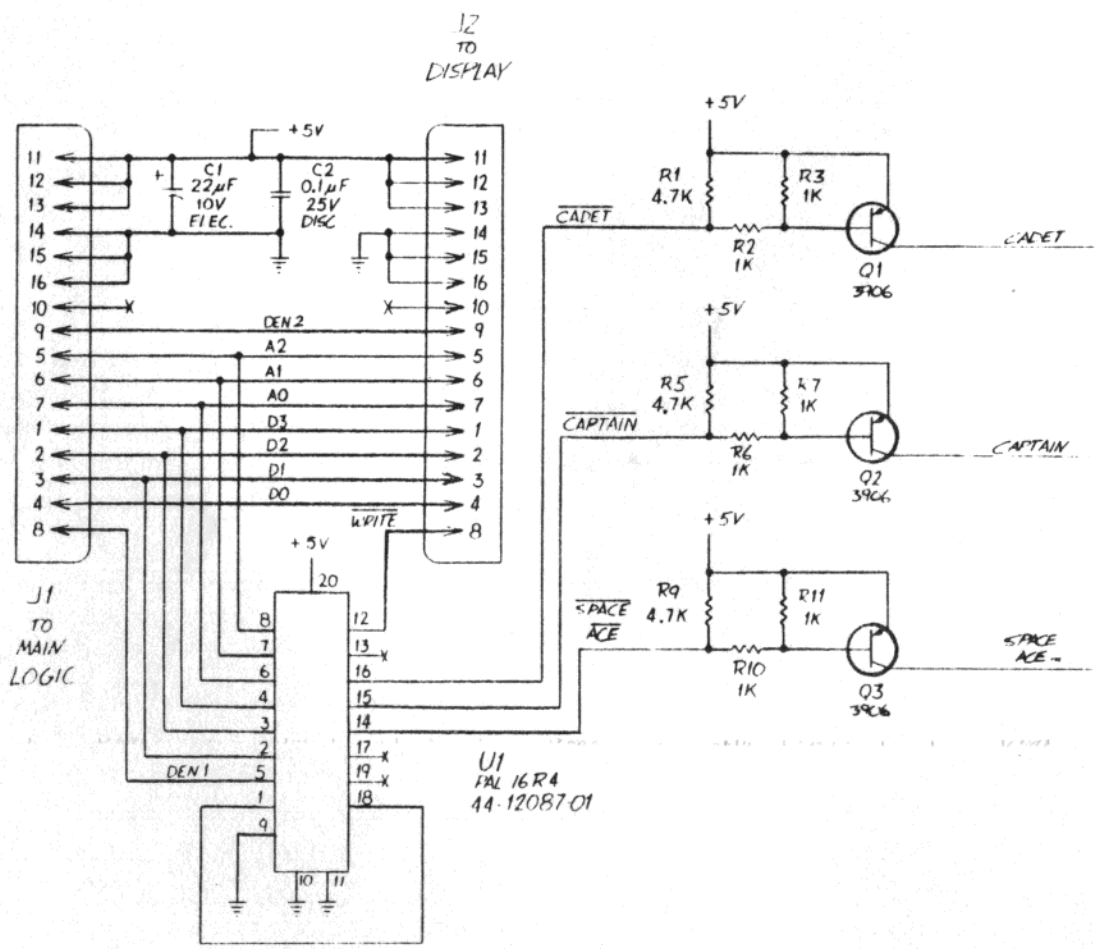

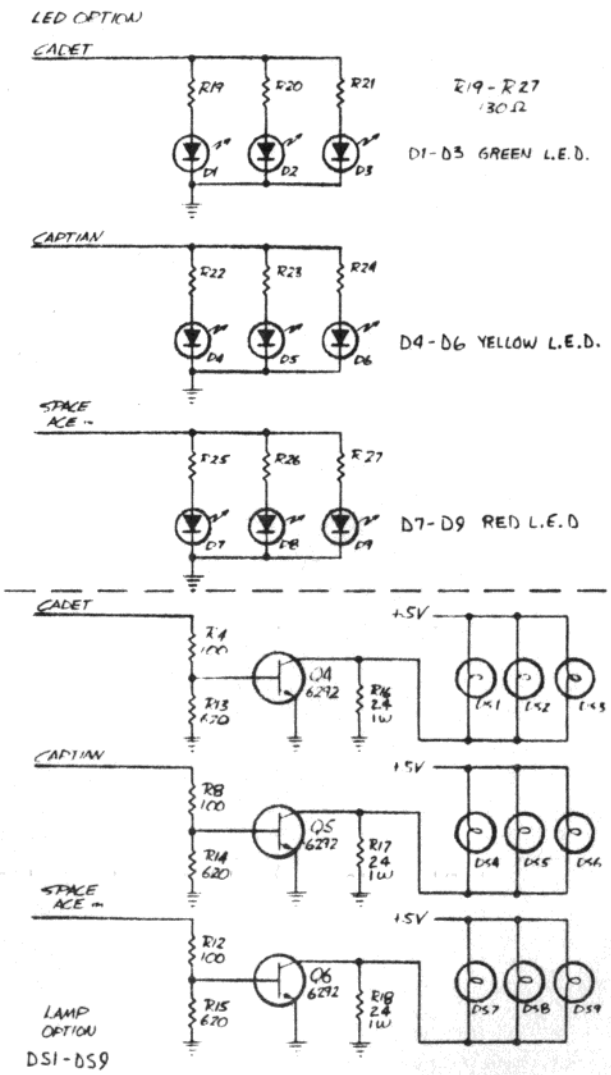

1. RESISTOR VALUES ARE IN OHMS, 1/4 W, 5% C.

NOTES: UNLESS OTHERWISE SPECIFIED

REVISIONS

REV	DESCRIPTION	DATE	APPROVED

MATERIAL

FINISH

DRAWN BY | DATE
PROJECT ENGR. | DATE
RELEASE APPROV | DATE

DO NOT SCALE DWG

TOLERANCE UNLESS OTHERWISE SPECIFIED

PROJECTION | SCALE

CINEMATRONICS INC.

DWG TITLE
PANEL ANNUNCIATOR
WITH LAMPS

MODEL NO | DWG SIZE D | DWG NO 12-12079-02 | REV A

CODE IDENT | SHEET 1 OF 1

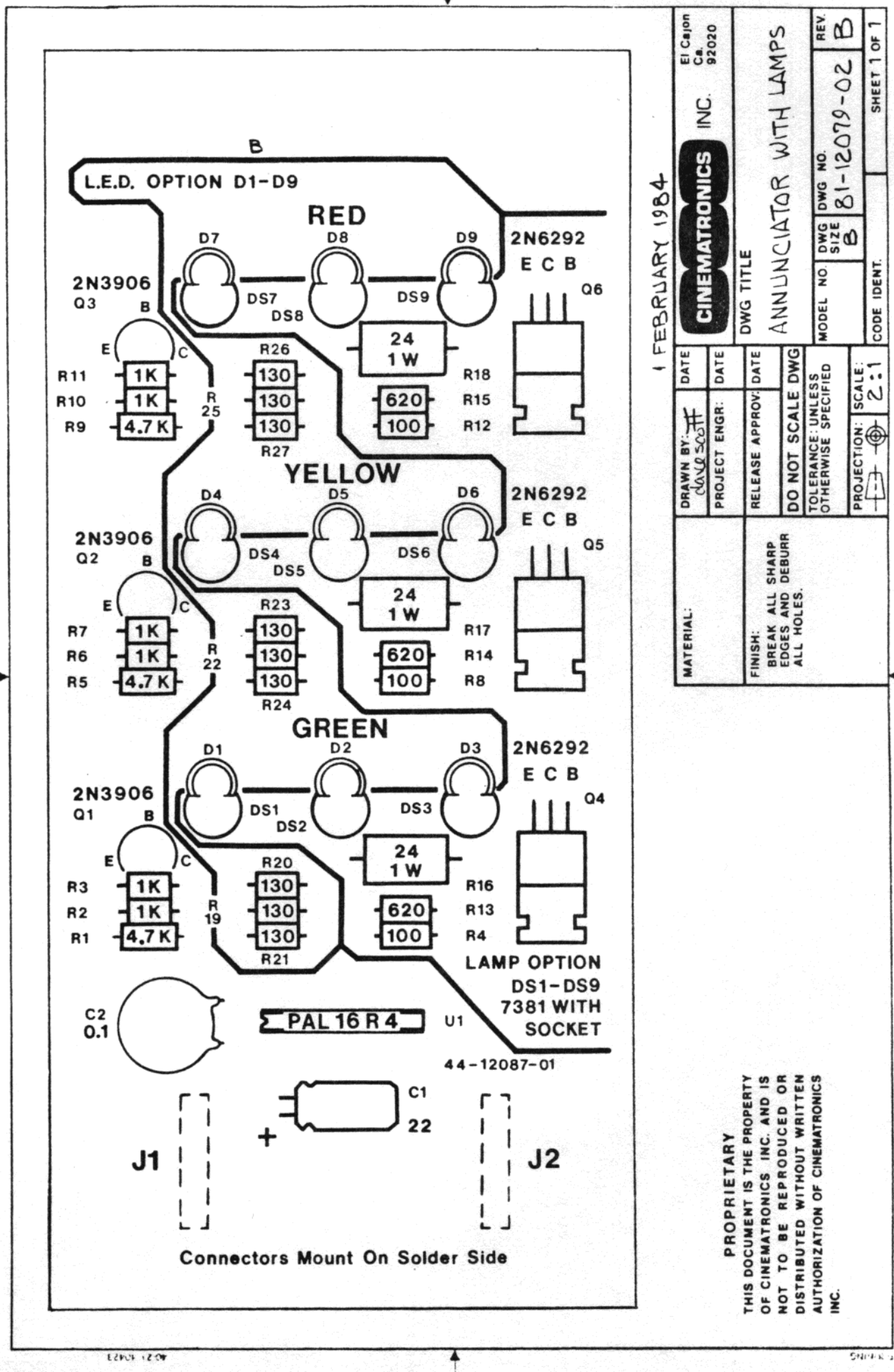
B
L.E.D. OPTION D1-D9
RED
D7
D8
D9
2N6292
E C B
2N3906
Q3
B
DS7
DS8
DS9
Q6
E
C
R26
24
1 W
R11
1K
R10
1K
R9
4.7 K
R25
130
130
130
620
100
R18
R15
R12
R27
YELLOW
D4
D5
D6
2N6292
E C B
2N3906
Q2
B
DS4
DS5
DS6
Q5
E
C
R23
24
1 W
R7
1K
R6
1K
R5
4.7 K
R22
130
130
130
620
100
R17
R14
R8
R24
GREEN
D1
D2
D3
2N6292
E C B
2N3906
Q1
B
DS1
DS2
DS3
Q4
E
C
R20
24
1 W
R3
1K
R2
1K
R1
4.7 K
R19
130
130
130
620
100
R16
R13
R4
R21
LAMP OPTION
DS1-DS9
7381 WITH
SOCKET
C2
0.1
PAL 16 R 4
U1
44-12087-01
C1
22
J1
J2
Connectors Mount On Solder Side
1 FEBRUARY 1984
CINEMATRONICS INC.
El Cajon Ca. 92020
DRAWN BY: dave scott
DATE
PROJECT ENGR:
DATE
RELEASE APPROV:
DATE
DO NOT SCALE DWG
TOLERANCE: UNLESS OTHERWISE SPECIFIED
PROJECTION:
SCALE: 2:1
MATERIAL:
FINISH: BREAK ALL SHARP EDGES AND DEBURR ALL HOLES.
DWG TITLE
ANNUNCIATOR WITH LAMPS
MODEL NO.
DWG SIZE B
DWG NO. 81-12079-02
REV. B
CODE IDENT.
SHEET 1 OF 1
PROPRIETARY
THIS DOCUMENT IS THE PROPERTY OF CINEMATRONICS INC. AND IS NOT TO BE REPRODUCED OR DISTRIBUTED WITHOUT WRITTEN AUTHORIZATION OF CINEMATRONICS INC.

MAGICOM MAIN LOGIC SCHEMATIC REVISIONS

A. Original release.

B. R3: Was 1K; became 300.

D0 on U20 incorrectly shown as Pin 8. Changed to pin 18 on 6/23/83.

C. Addition of capacitor C63, 220pf disc between U24, Pin 3 and ground. 6/27/83.

D. C54: Was 0.001uf disc. Became 0.1uf disc on 6/29/83.

C63: Was 220pf disc. Became 0.001uf disc on 6/29/83.

74LS244 inserted between 4MHz signal and U1 (Z80), Pin 6. U17, Pins 13 and 7 used - these were formerly a spare gate. 6/29/83.

E. C40, 0.01 disc tied between U22, Pin 2 and ground is deleted.

74LS244 inserted between Q1 collector and U22, Pins 1 and 2. U17, Pins 11 and 9 used - these were formerly a spare gate.

U1(Z80), Pin 25 cut from U7 (MC68705P5), Pin 9. U1(Z80), Pin 25 tied to R48 (new addition) 4.7K $\frac{1}{4}$W 5% resistor. Other side of R48 tied to +5V.

U18(74LS245), Pin 19 cut from U7(68705, Pin 14. U18, Pin 19 tied to +5V.

U17(74LS244), Pin 17 cut from U7, Pin 19. U17, Pin 17 tied to +5V.

U23(74LS244), Pin 1 cut from U22(74LS00), Pin 11. U23, Pin 1 tied to ground.

All of "E" above were effective on 7/8/83.

F. Deletion of the following effective 7/8/83:

U5	74LS244
U6	74LS393
U12	74LS244
U13	74LS393
U17	74LS244
U18	74LS245

Subtitute U23 for U17 (74LS244) for clock signal into Z80 (U1, Pin 6 from U23, Pin 7) and reset signal into U22, Pins 1 and 2 from U23, Pin 9 effective 7/8/83.

G. C63: Was 0.001uf disc. Became 470pf effective 9/5/83.

H. Reset signal sent from U23, Pin 9 to U16, Pin 1 to cure false coin count on power up.

I. Reference letter not used.

J. Correct pin out for inputs on U20(74LS244) effective 9/16/83.

K. C63: Was 470pf disc; became 330pf disc.
C17: Was 330pf mica; became 330pf disc.

Addition of U31(74LS74) to divide clock.

Y1: Was 4.000MHz; became 16.000MHz.
U24: Was74LS04; became 74S04.

Addition of R29 between U29, Pin 4 and C24.
Addition of R50 between U30, Pin 4 and C50.

These two additions allow option for U29 and 30 with the following components:

		LM383	CA2002
R49, R50	=	0 ohm jumper	2.2 ohm, $\frac{1}{4}$W 5%
C24, C50	=	0.2 Disc	0.1 disc

Addition of Jumper W1, when installed, allows board to be used with Pioneer 7820 disc player with proper software.

Deleted: U7 MC68705

Addition (reinstallation) U6, 74LS393
U13, 74LS393
U6, Pins 2 and 12, and U13, Pins 2 and 12 all grounds.

U6, Pin 6 tied to U26, Pin 11 (RTC).

U13, Pin 13 tied to U26, Pin 5 (GI CLK)

All of "K" above effective 10/10/83.

"K" revision schematic is for "C" revision printed circuit board used with LDV-1000 laser disc player.

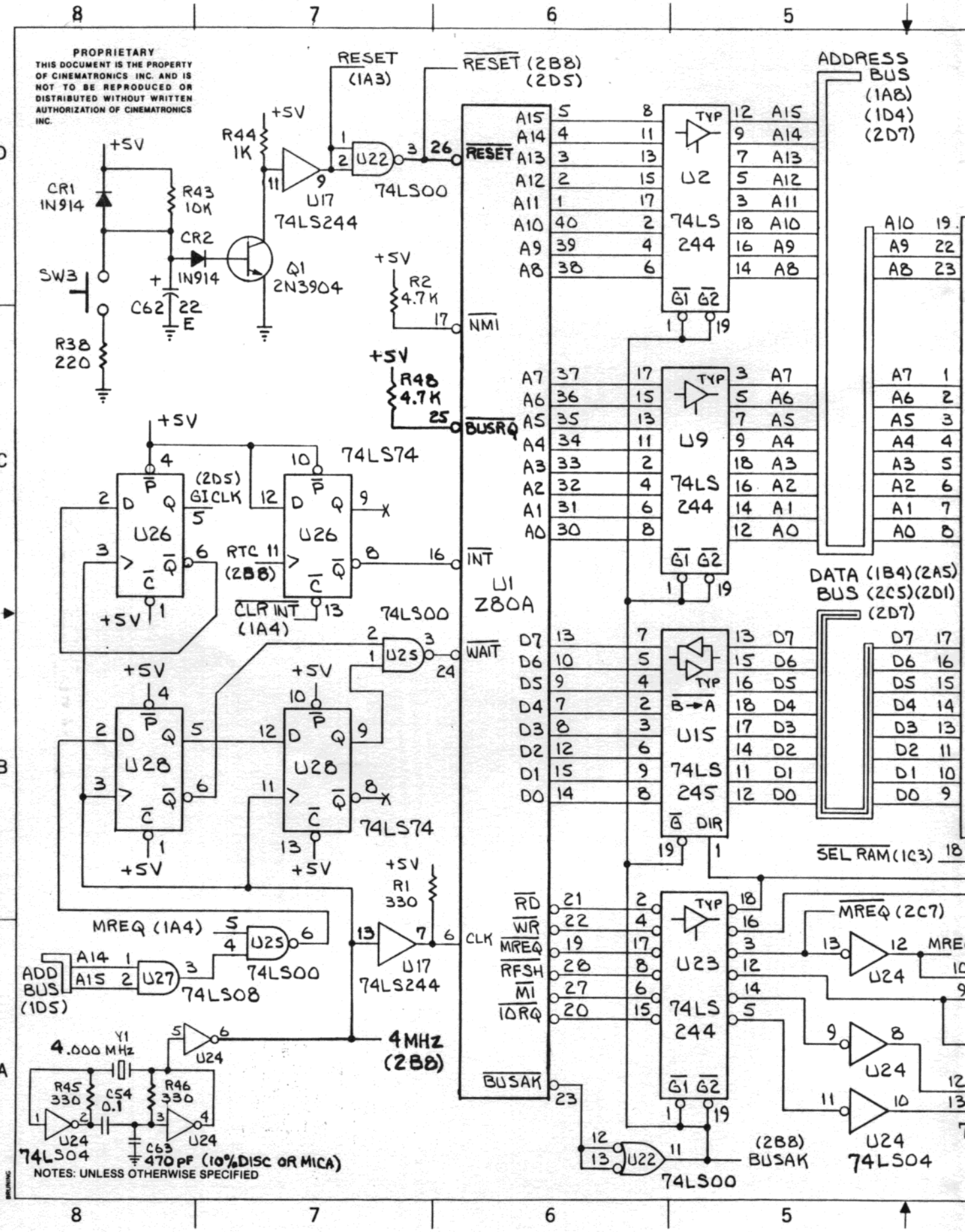
PROPRIETARY
THIS DOCUMENT IS THE PROPERTY OF CINEMATRONICS INC. AND IS NOT TO BE REPRODUCED OR DISTRIBUTED WITHOUT WRITTEN AUTHORIZATION OF CINEMATRONICS INC.
RESET (1A3)
RESET (2B8) (2D5)
ADDRESS BUS (1A8) (1D4) (2D7)
+5V
R44 1K
U22
74LS00
U17
74LS244
CR1 IN914
R43 10K
CR2 IN914
Q1 2N3904
SW3
C62 22 E
R38 220
R2 4.7K
NMI
R48 4.7K
BUSRQ
74LS74
U26
(2D5) G1CLK
RTC (2B8)
CLR INT (1A4)
INT
U1 Z80A
WAIT
U28
MREQ (1A4)
ADD BUS (1D5)
U27
74LS08
R1 330
CLK
4MHz (2B8)
Y1 4.000 MHz
R45 330
C54 0.1
R46 330
C63 470 pF (10% DISC OR MICA)
A15
A14
A13
A12
A11
A10
A9
A8
A7
A6
A5
A4
A3
A2
A1
A0
U2
U9
74LS 244
D7
D6
D5
D4
D3
D2
D1
D0
U15
74LS 245
B→A
DIR
DATA (1B4)(2A5) BUS (2C5)(2D1) (2D7)
SEL RAM (1C3)
RD
WR
MREQ
RFSH
M1
IORQ
U23
MREQ (2C7)
BUSAK
(2B8) BUSAK
NOTES: UNLESS OTHERWISE SPECIFIED

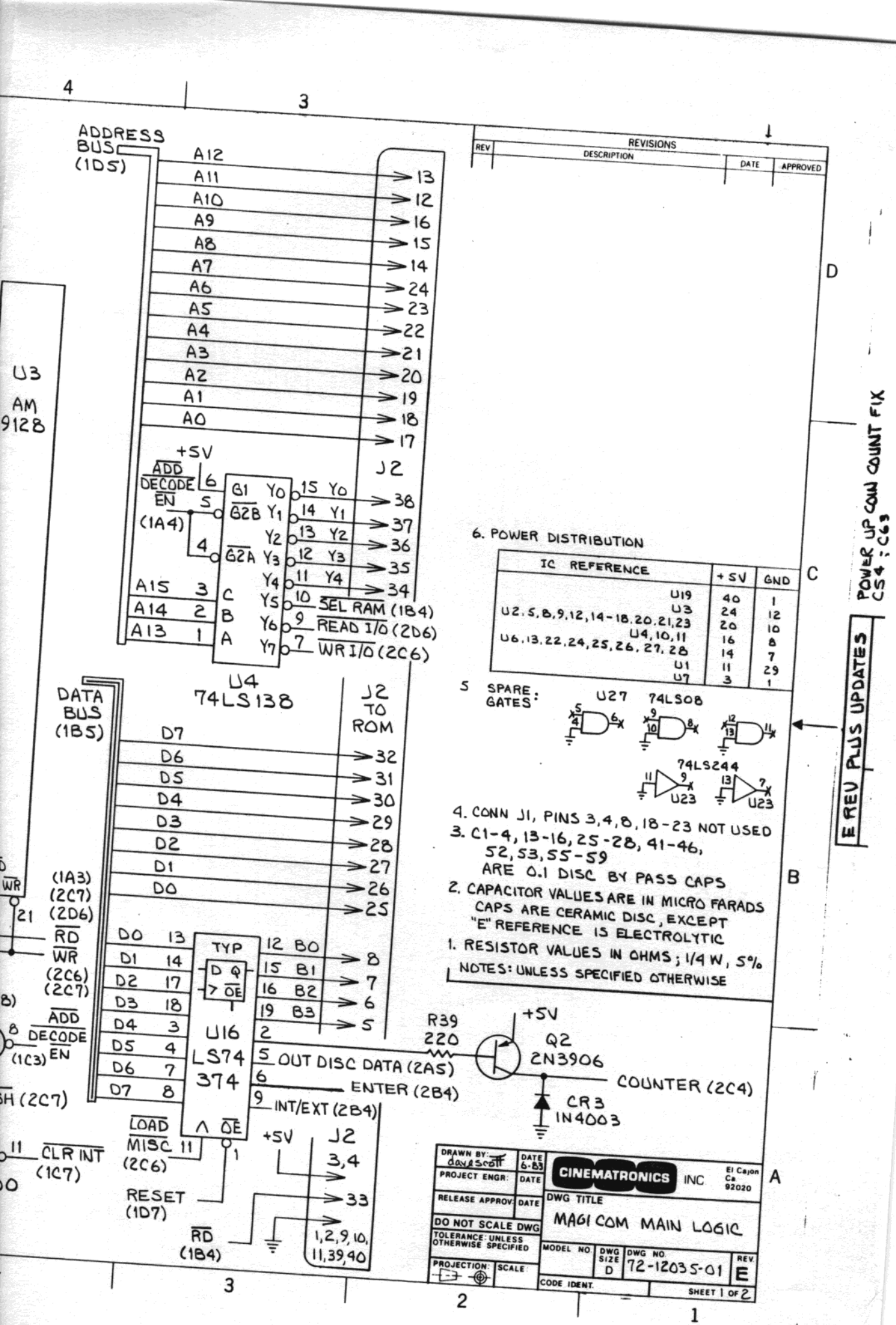
ADDRESS BUS (1D5)
A12
A11
A10
A9
A8
A7
A6
A5
A4
A3
A2
A1
A0
13
12
16
15
14
24
23
22
21
20
19
18
17
J2
+5V
ADD DECODE EN
(1A4)
U4
74LS138
G1
G2B
G2A
A
B
C
Y0
Y1
Y2
Y3
Y4
Y5
Y6
Y7
38
37
36
35
34
SEL RAM (1B4)
READ I/O (2D6)
WR I/O (2C6)
DATA BUS (1B5)
D7
D6
D5
D4
D3
D2
D1
D0
J2 TO ROM
32
31
30
29
28
27
26
25
U16
LS74 374
TYP
D
Q
OE
B0
B1
B2
B3
8
7
6
5
OUT DISC DATA (2A5)
ENTER (2B4)
INT/EXT (2B4)
LOAD MISC (2C6)
CLR INT (1C7)
RESET (1D7)
RD (1B4)
+5V
J2
3,4
33
1,2,9,10,11,39,40
R39
220
Q2
2N3906
COUNTER (2C4)
CR3
IN4003
U3
AM 9128
WR
(1A3)
(2C7)
(2D6)
RD
WR
(2C6)
(2C7)
ADD DECODE EN
(1C3)
(2C7)
REVISIONS
REV
DESCRIPTION
DATE
APPROVED
POWER UP COUNT FIX
CS4 ; C63
E REV PLUS UPDATES
6. POWER DISTRIBUTION
IC REFERENCE
+5V
GND
U19 40 1
U3 24 12
U2,5,8,9,12,14-18,20,21,23 20 10
U4,10,11 16 8
U6,13,22,24,25,26,27,28 14 7
U1 11 29
U7 3 1
5 SPARE GATES:
U27 74LS08
74LS244
U23
4. CONN J1, PINS 3,4,8,18-23 NOT USED
3. C1-4, 13-16, 25-28, 41-46, 52, 53, 55-59 ARE 0.1 DISC BY PASS CAPS
2. CAPACITOR VALUES ARE IN MICRO FARADS CAPS ARE CERAMIC DISC, EXCEPT "E" REFERENCE IS ELECTROLYTIC
1. RESISTOR VALUES IN OHMS; 1/4 W, 5%
NOTES: UNLESS SPECIFIED OTHERWISE
DRAWN BY: dave scott
DATE 6-83
PROJECT ENGR:
RELEASE APPROV:
DO NOT SCALE DWG
TOLERANCE: UNLESS OTHERWISE SPECIFIED
PROJECTION:
SCALE:
CINEMATRONICS INC
El Cajon Ca 92020
DWG TITLE
MAGICOM MAIN LOGIC
MODEL NO.
DWG SIZE D
DWG NO. 72-12035-01
REV. E
CODE IDENT.
SHEET 1 OF 2

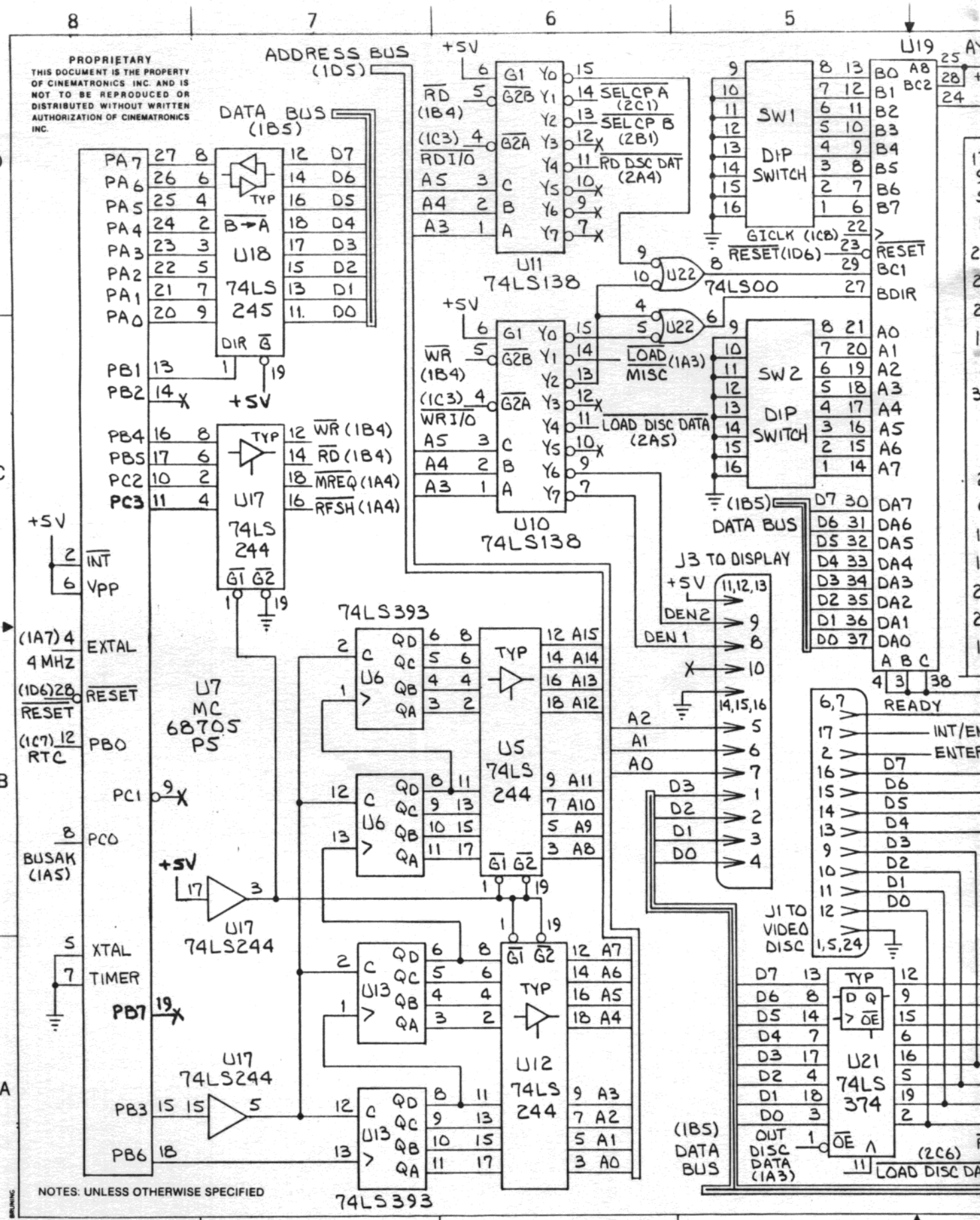
PROPRIETARY
THIS DOCUMENT IS THE PROPERTY OF CINEMATRONICS INC. AND IS NOT TO BE REPRODUCED OR DISTRIBUTED WITHOUT WRITTEN AUTHORIZATION OF CINEMATRONICS INC.
ADDRESS BUS (1D5)
DATA BUS (1B5)
U18 74LS 245
U17 74LS 244
U7 MC 68705 P5
U11 74LS138
U10 74LS138
U22 74LS00
SW1 DIP SWITCH
SW2 DIP SWITCH
U19
J3 TO DISPLAY
74LS393
U5 74LS 244
U12 74LS 244
U21 74LS 374
J1 TO VIDEO DISC
(1B5) DATA BUS
(1B5) DATA BUS
LOAD DISC DATA (2A5)
LOAD MISC (1A3)
SELCP A (2C1)
SELCP B (2B1)
RD DSC DAT (2A4)
GICLK (1C8)
RESET (1D6)
READY
INT/EN
ENTER
OUT DISC DATA (1A3)
LOAD DISC DA
(2C6)
4 MHz
BUSAK (1A5)
RTC
XTAL
TIMER
NOTES: UNLESS OTHERWISE SPECIFIED

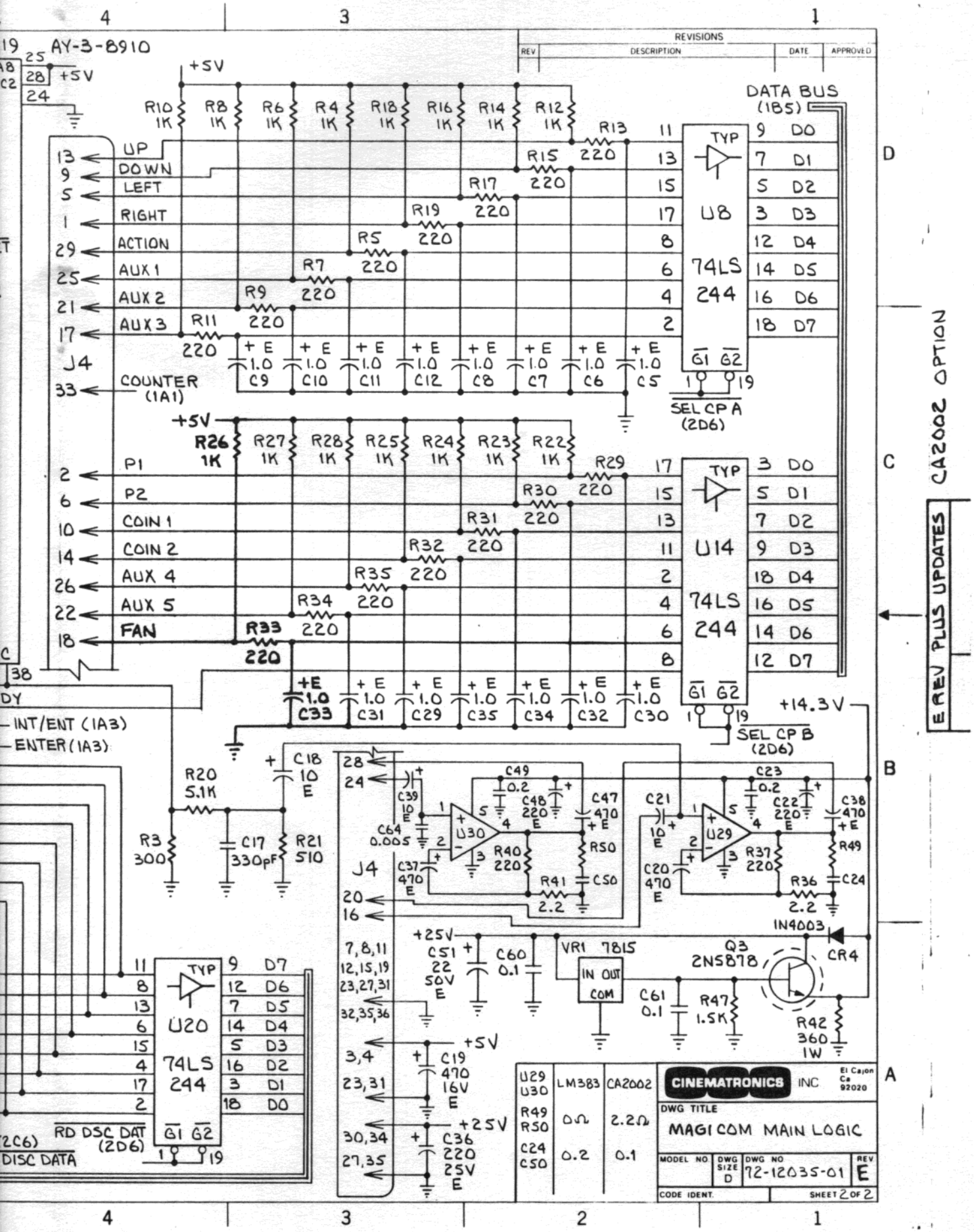
AY-3-8910
REVISIONS
REV
DESCRIPTION
DATE
APPROVED
DATA BUS (1B5)
+5V
UP
DOWN
LEFT
RIGHT
ACTION
AUX 1
AUX 2
AUX 3
COUNTER (1A1)
U8
74LS 244
SEL CP A (2D6)
P1
P2
COIN 1
COIN 2
AUX 4
AUX 5
FAN
U14
74LS 244
SEL CP B (2D6)
+14.3V
INT/ENT (1A3)
ENTER (1A3)
U30
U29
U20
74LS 244
RD DSC DAT (2D6)
DISC DATA
VR1 7815
Q3 2N5878
IN4003
CR4
CA2002 OPTION
E REV PLUS UPDATES
CINEMATRONICS INC
El Cajon Ca 92020
DWG TITLE
MAGICOM MAIN LOGIC
DWG NO 72-12035-01
REV E
SHEET 2 OF 2

PROPRIETARY
THIS DOCUMENT IS THE PROPERTY OF CINEMATRONICS INC. AND IS NOT TO BE REPRODUCED OR DISTRIBUTED WITHOUT WRITTEN AUTHORIZATION OF CINEMATRONICS INC.

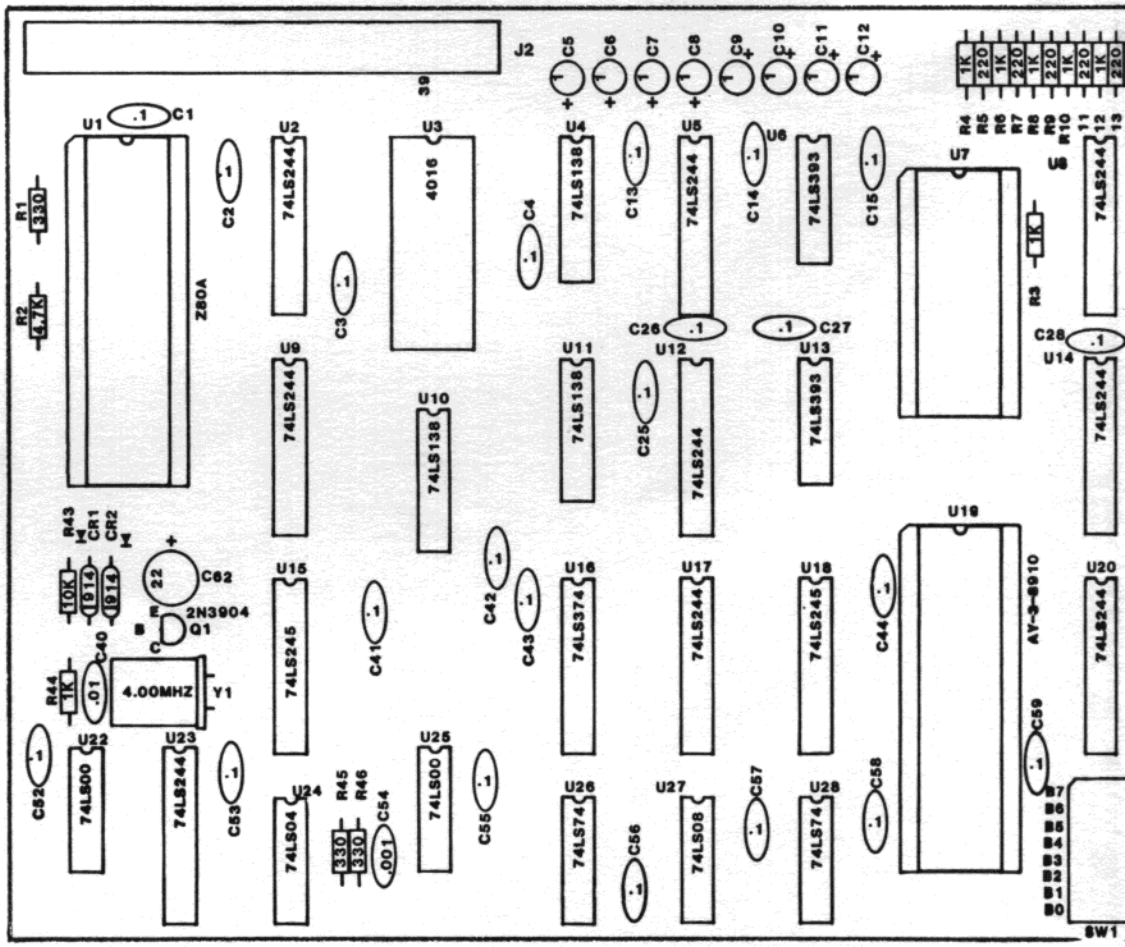

NOTES: UNLESS OTHERWISE SPECIFIED

BRUNING

REVISIONS			
REV	DESCRIPTION	DATE	APPROVED

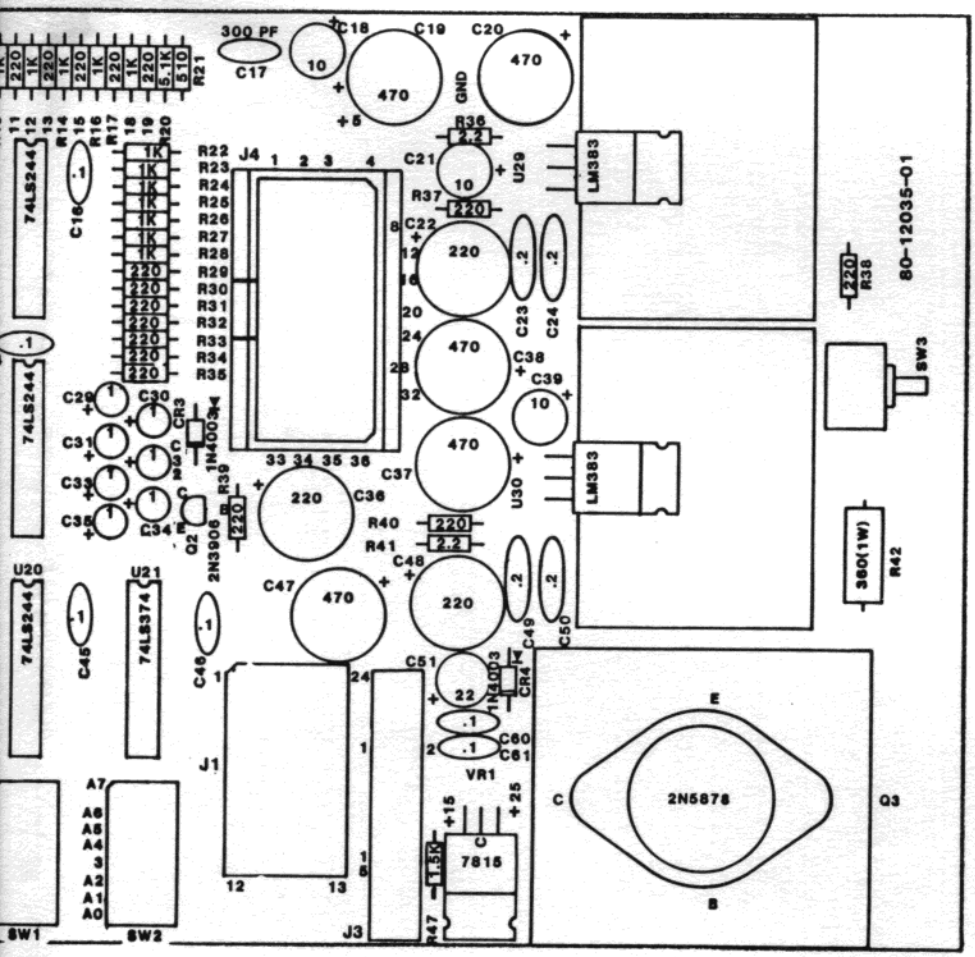

MATERIAL:	DRAWN BY: daveScott	DATE 6-83	CINEMATRONICS INC	El Cajon Ca 92020	
	PROJECT ENGR:	DATE	DWG TITLE: STARCOM MAIN LOGIC		
	RELEASE APPROV:	DATE			
FINISH:	DO NOT SCALE DWG				
	TOLERANCE UNLESS OTHERWISE SPECIFIED		MODEL NO.	DWG SIZE D	DWG NO. 81-12035-01 REV A
	PROJECTION:	SCALE:	CODE IDENT.		SHEET 1 OF 1

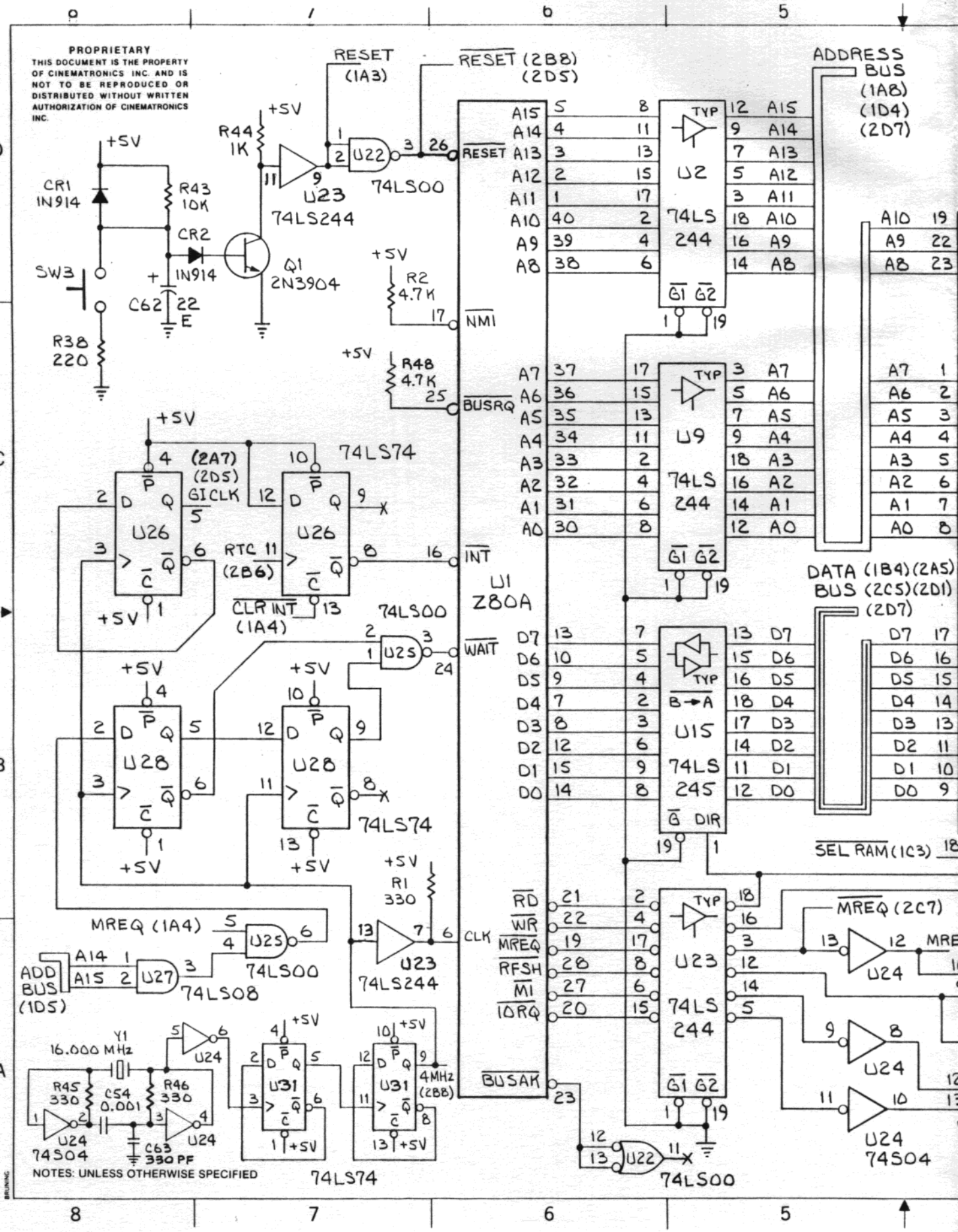
PROPRIETARY
THIS DOCUMENT IS THE PROPERTY OF CINEMATRONICS INC. AND IS NOT TO BE REPRODUCED OR DISTRIBUTED WITHOUT WRITTEN AUTHORIZATION OF CINEMATRONICS INC.
RESET (1A3)
RESET (2B8) (2D5)
ADDRESS BUS (1A8) (1D4) (2D7)
+5V
R44 1K
U22
74LS00
U23
74LS244
CR1 IN914
R43 10K
CR2
IN914
Q1 2N3904
SW3
C62 22 E
R38 220
R2 4.7K
R48 4.7K
NMI
BUSRQ
U2
74LS 244
U9
74LS 244
U15
74LS 245
TYP
G1 G2
G DIR
B→A
A15
A14
A13
A12
A11
A10
A9
A8
A7
A6
A5
A4
A3
A2
A1
A0
D7
D6
D5
D4
D3
D2
D1
D0
DATA (1B4)(2A5) BUS (2C5)(2D1) (2D7)
SEL RAM (1C3)
U1
Z80A
INT
WAIT
CLK
RD
WR
MREQ
RFSH
M1
IORQ
BUSAK
74LS74
U26
(2A7) (2D5) GICLK
RTC (2B6)
CLR INT (1A4)
74LS00
U25
U28
R1 330
MREQ (1A4)
ADD BUS (1D5)
A14
A15
U27
74LS08
MREQ (2C7)
U24
74S04
Y1 16.000 MHz
R45 330
C54 0.001
R46 330
C63 330 PF
U31
4MHz (2B8)
NOTES: UNLESS OTHERWISE SPECIFIED
BRUNING

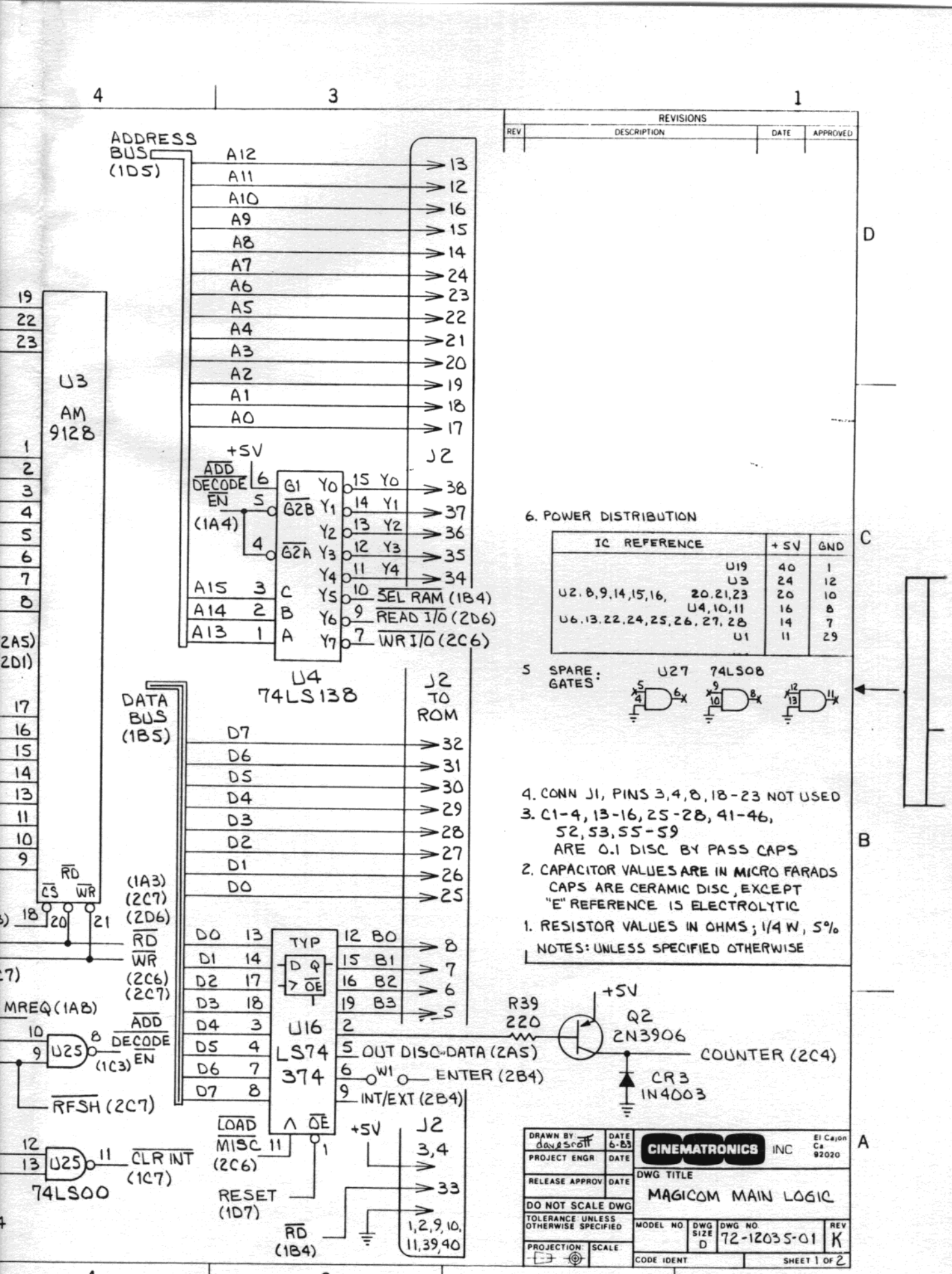

REVISIONS			
REV	DESCRIPTION	DATE	APPROVED

6. POWER DISTRIBUTION

IC REFERENCE	+5V	GND
U19	40	1
U3	24	12
U2.8,9,14,15,16, 20,21,23	20	10
U4,10,11	16	8
U6,13,22,24,25,26,27,28	14	7
U1	11	29

5 SPARE GATES: U27 74LS08

4. CONN J1, PINS 3,4,8,18-23 NOT USED
3. C1-4, 13-16, 25-28, 41-46, 52, 53, 55-59 ARE 0.1 DISC BY PASS CAPS
2. CAPACITOR VALUES ARE IN MICRO FARADS CAPS ARE CERAMIC DISC, EXCEPT "E" REFERENCE IS ELECTROLYTIC
1. RESISTOR VALUES IN OHMS; 1/4 W, 5%

NOTES: UNLESS SPECIFIED OTHERWISE

DRAWN BY: dave scott	DATE 6-83	CINEMATRONICS INC	El Cajon Ca 92020
PROJECT ENGR	DATE	DWG TITLE: MAGICOM MAIN LOGIC	
RELEASE APPROV	DATE		
DO NOT SCALE DWG			
TOLERANCE UNLESS OTHERWISE SPECIFIED		MODEL NO	DWG SIZE D: 72-12035-01 REV K
PROJECTION	SCALE	CODE IDENT	SHEET 1 OF 2

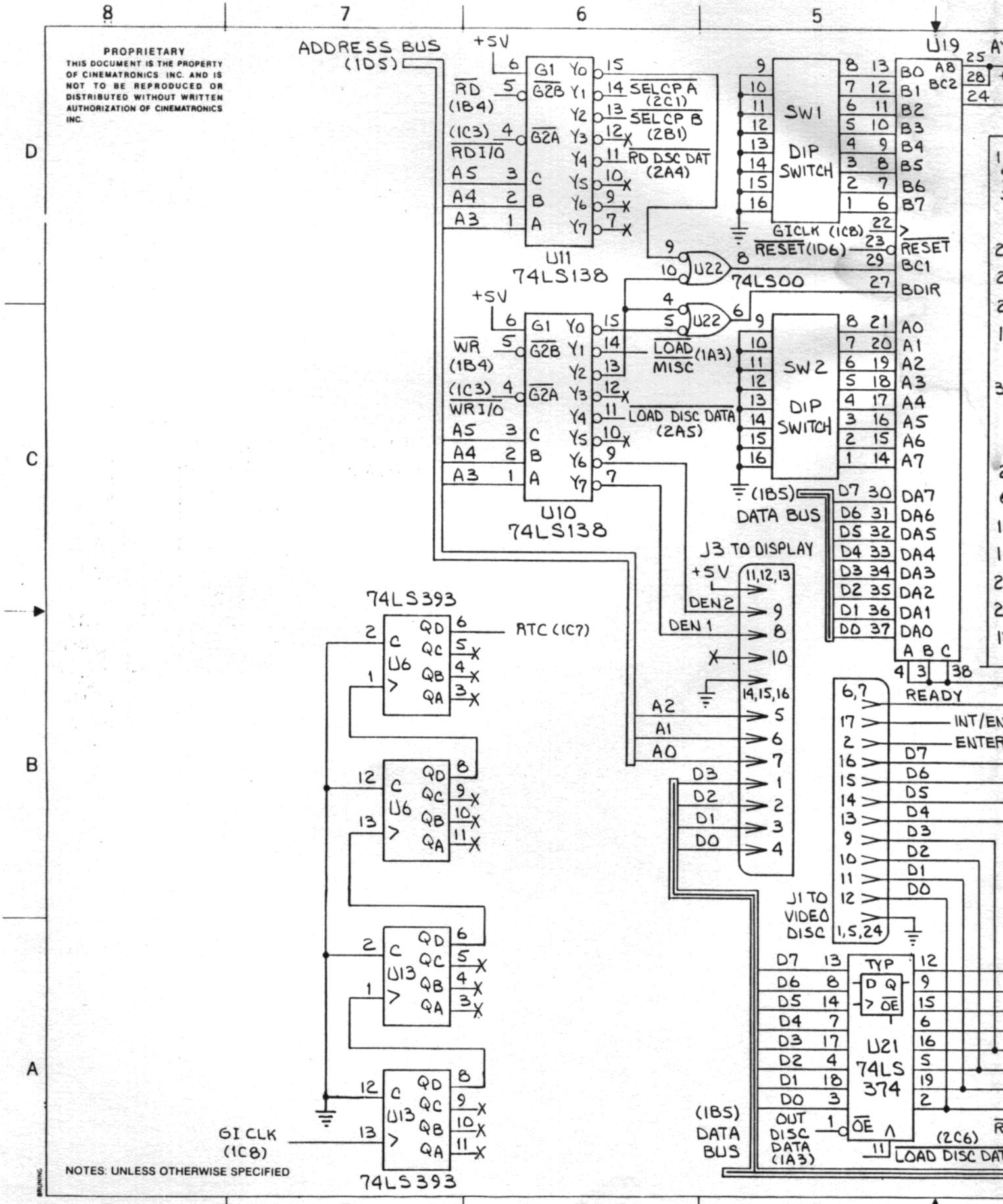
PROPRIETARY
THIS DOCUMENT IS THE PROPERTY OF CINEMATRONICS INC. AND IS NOT TO BE REPRODUCED OR DISTRIBUTED WITHOUT WRITTEN AUTHORIZATION OF CINEMATRONICS INC.
ADDRESS BUS (1D5)
+5V
U11 74LS138
U10 74LS138
SELCP A (2C1)
SELCP B (2B1)
RD DSC DAT (2A4)
LOAD MISC (1A3)
LOAD DISC DATA (2A5)
SW1 DIP SWITCH
SW2 DIP SWITCH
U22 74LS00
GICLK (1C8)
RESET (1D6)
BDIR
DATA BUS (1B5)
J3 TO DISPLAY
J1 TO VIDEO DISC
READY
INT/EN
ENTER
74LS393
RTC (1C7)
U21 74LS 374
LOAD DISC DAT
NOTES: UNLESS OTHERWISE SPECIFIED

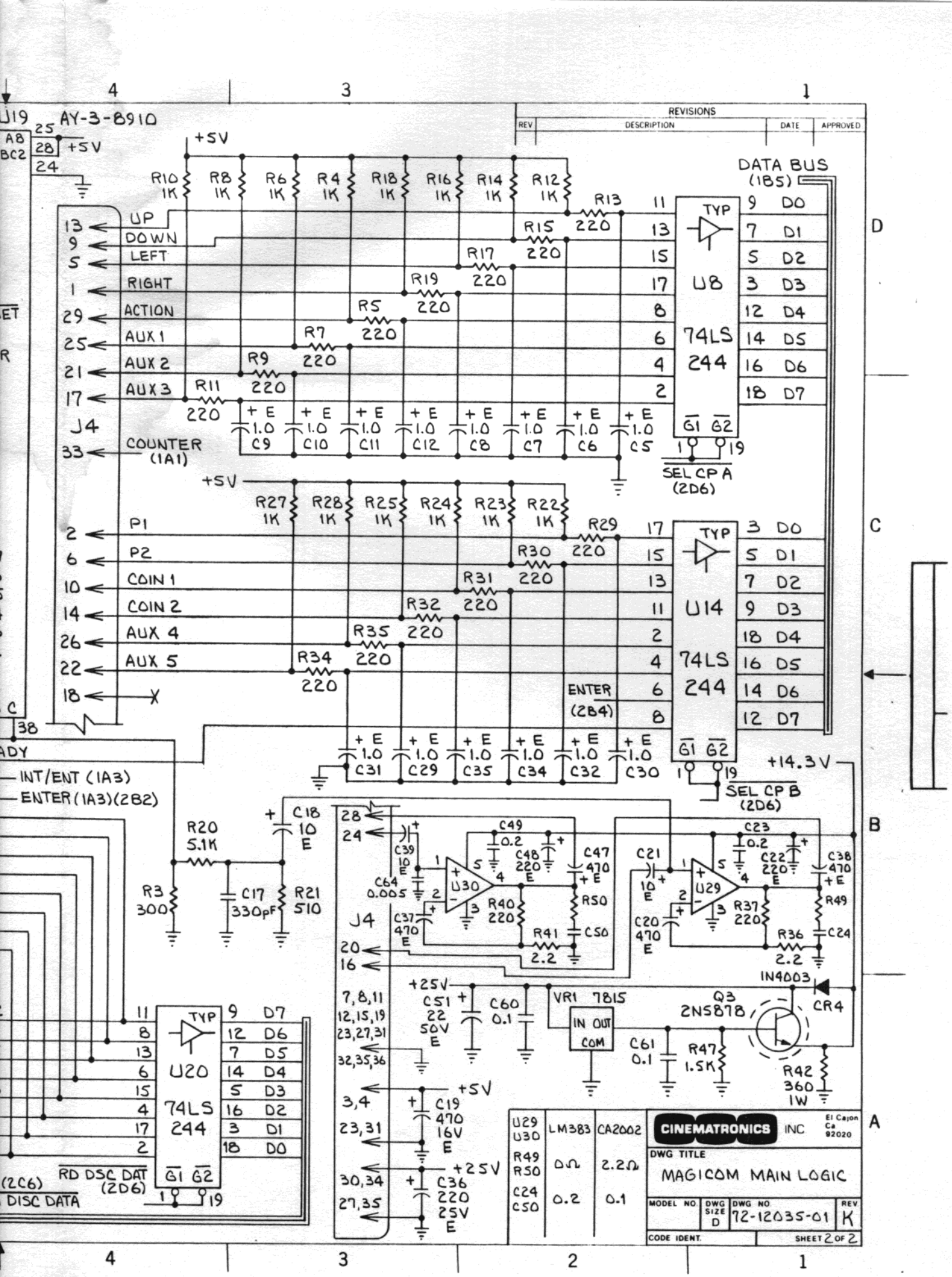
REVISIONS
REV
DESCRIPTION
DATE
APPROVED
U19
AY-3-8910
+5V
DATA BUS (1B5)
R10 1K
R8 1K
R6 1K
R4 1K
R18 1K
R16 1K
R14 1K
R12 1K
R13 220
R15 220
R17 220
R19 220
R5 220
R7 220
R9 220
R11 220
UP
DOWN
LEFT
RIGHT
ACTION
AUX 1
AUX 2
AUX 3
J4
COUNTER (1A1)
U8
74LS 244
TYP
D0
D1
D2
D3
D4
D5
D6
D7
G1 G2
SEL CP A (2D6)
C9 1.0 E
C10 1.0 E
C11 1.0 E
C12 1.0 E
C8 1.0 E
C7 1.0 E
C6 1.0 E
C5 1.0 E
P1
P2
COIN 1
COIN 2
AUX 4
AUX 5
R27 1K
R28 1K
R25 1K
R24 1K
R23 1K
R22 1K
R29 220
R30 220
R31 220
R32 220
R35 220
R34 220
ENTER (2B4)
U14
SEL CP B (2D6)
C31 1.0 E
C29 1.0 E
C35 1.0 E
C34 1.0 E
C32 1.0 E
C30 1.0 E
+14.3V
INT/ENT (1A3)
ENTER (1A3)(2B2)
R20 5.1K
C18 10 E
R3 300
C17 330pF
R21 510
C64 0.005
C39 10 E
C37 470 E
U30
U29
C49 0.2
C48 220 E
C47 470 E
R40 220
R41 2.2
R50
C50
C21 10 E
C20 470 E
C23 0.2
C22 220 E
C38 470 E
R37 220
R36 2.2
R49
C24
+25V
C51 22 50V E
C60 0.1
VR1 7815
IN OUT COM
Q3 2N5878
IN4003
CR4
C61 0.1
R47 1.5K
R42 360 1W
C19 470 16V E
C36 220 25V E
U20
RD DSC DAT (2D6)
DISC DATA (2C6)
U29 U30 LM383 CA2002
R49 R50 0Ω 2.2Ω
C24 C50 0.2 0.1
CINEMATRONICS INC
El Cajon Ca 92020
DWG TITLE
MAGICOM MAIN LOGIC
MODEL NO.
DWG SIZE D
DWG NO. 72-12035-01
REV K
CODE IDENT.
SHEET 2 OF 2

PROPRIETARY
THIS DOCUMENT IS THE PROPERTY OF CINEMATRONICS INC. AND IS NOT TO BE REPRODUCED OR DISTRIBUTED WITHOUT WRITTEN AUTHORIZATION OF CINEMATRONICS INC.

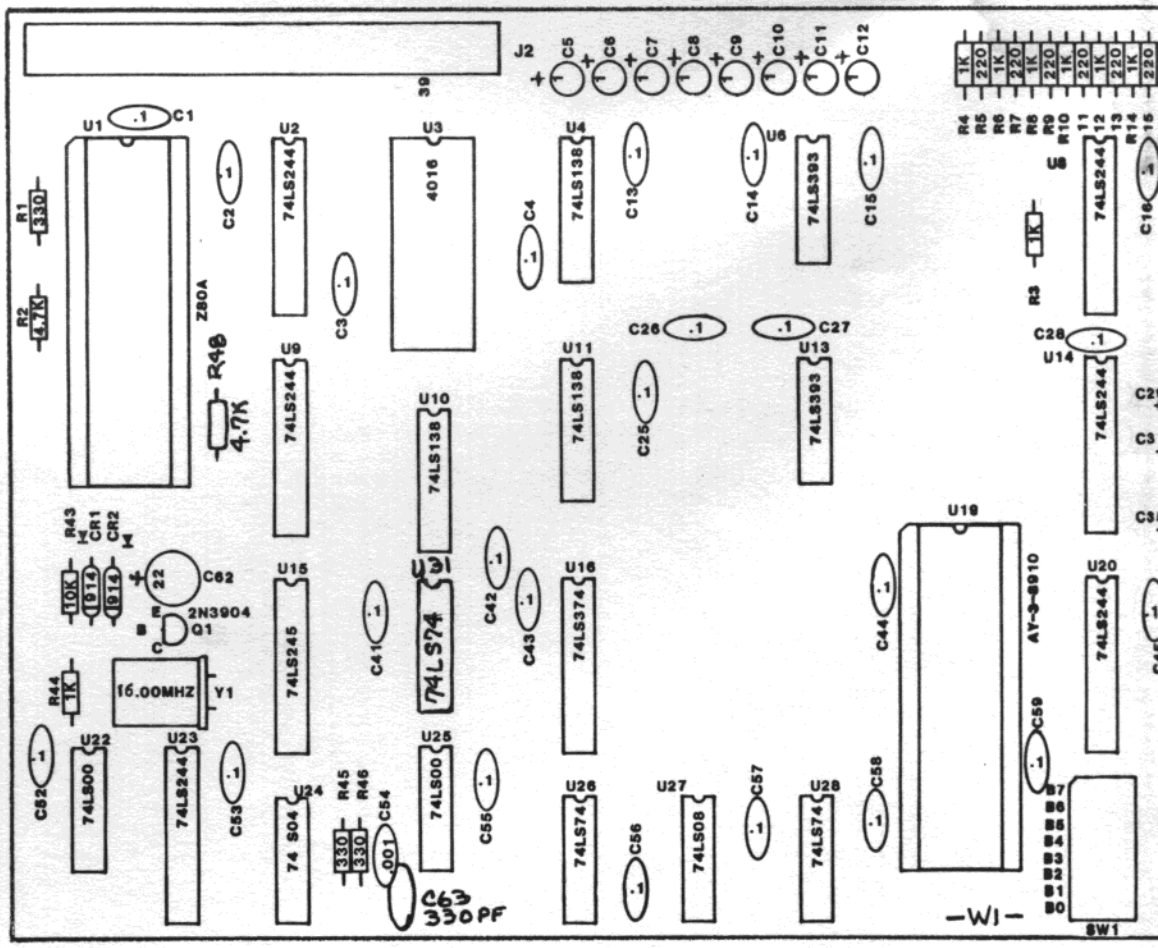

NOTES: UNLESS OTHERWISE SPECIFIED

BRUNING

REVISIONS			
REV	DESCRIPTION	DATE	APPROVED

U29·30	LM383	CA2002
R49·50	0	2.2
C24·50	0.2	0.1

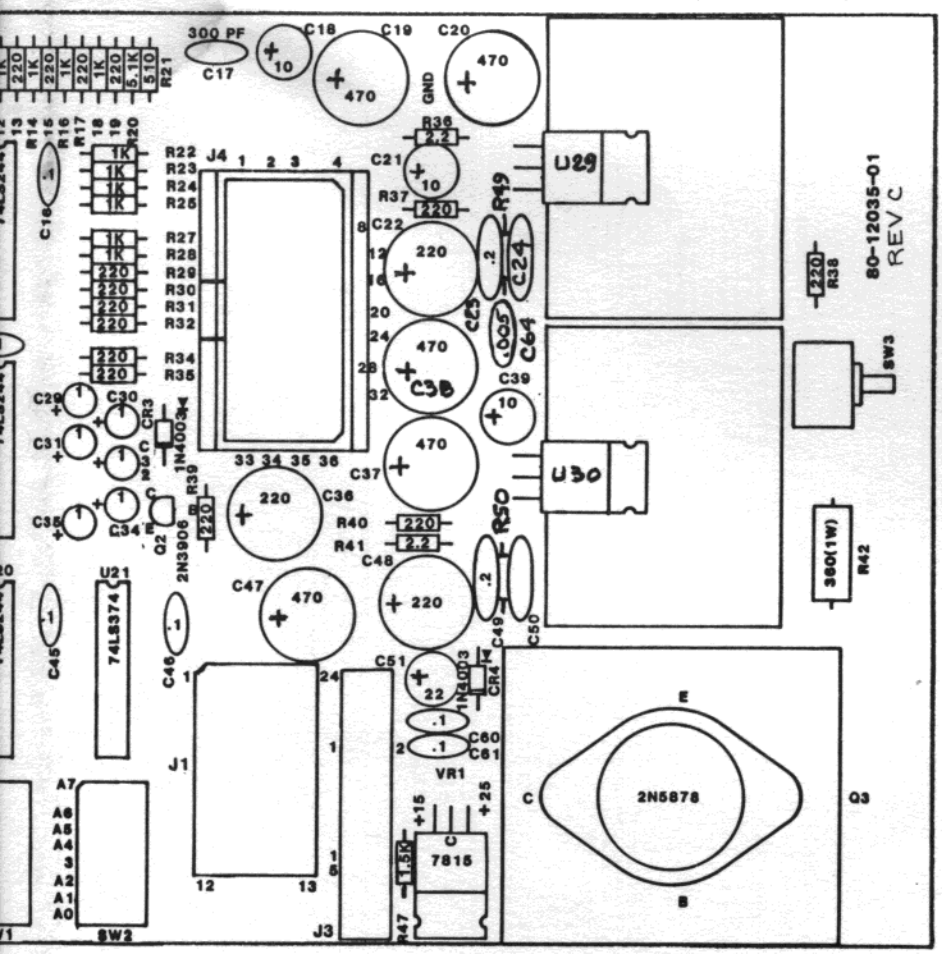

MATERIAL:	DRAWN BY: davesoff	DATE 6-83	CINEMATRONICS INC	El Cajon Ca 92020
	PROJECT ENGR:	DATE	DWG TITLE: MAGICOM MAIN LOGIC	
	RELEASE APPROV	DATE		
FINISH:	DO NOT SCALE DWG			
	TOLERANCE: UNLESS OTHERWISE SPECIFIED		MODEL NO.	DWG SIZE D / DWG NO. 81-12035-01 / REV G
	PROJECTION:	SCALE:	CODE IDENT.	SHEET 1 OF 1

PROPRIETARY
THIS DOCUMENT IS THE PROPERTY OF CINEMATRONICS INC. AND IS NOT TO BE REPRODUCED OR DISTRIBUTED WITHOUT WRITTEN AUTHORIZATION OF CINEMATRONICS INC.

REVISIONS			
REV	DESCRIPTION	DATE	APPROVED

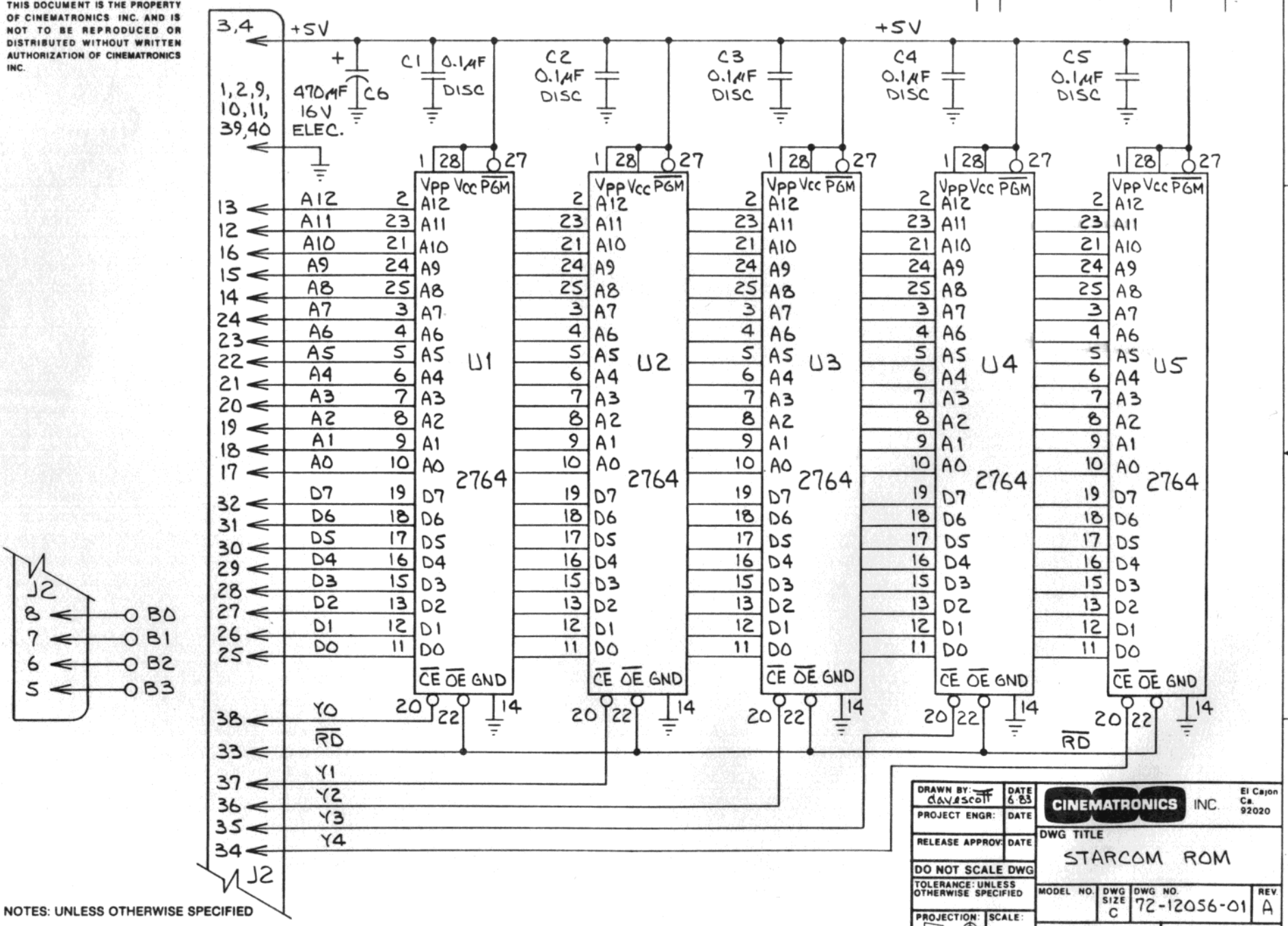

NOTES: UNLESS OTHERWISE SPECIFIED

DRAWN BY: davescott	DATE 6 83	CINEMATRONICS INC.	El Cajon Ca. 92020
PROJECT ENGR:	DATE	DWG TITLE: STARCOM ROM	
RELEASE APPROV:	DATE		
DO NOT SCALE DWG			
TOLERANCE: UNLESS OTHERWISE SPECIFIED		MODEL NO.	DWG SIZE C; DWG NO. 72-12056-01; REV. A
PROJECTION:	SCALE:	CODE IDENT.	SHEET 1 OF 1

BRUNING 40-21 40423-1

PROPRIETARY
THIS DOCUMENT IS THE PROPERTY OF CINEMATRONICS INC. AND IS NOT TO BE REPRODUCED OR DISTRIBUTED WITHOUT WRITTEN AUTHORIZATION OF CINEMATRONICS INC.

REVISIONS			
REV	DESCRIPTION	DATE	APPROVED

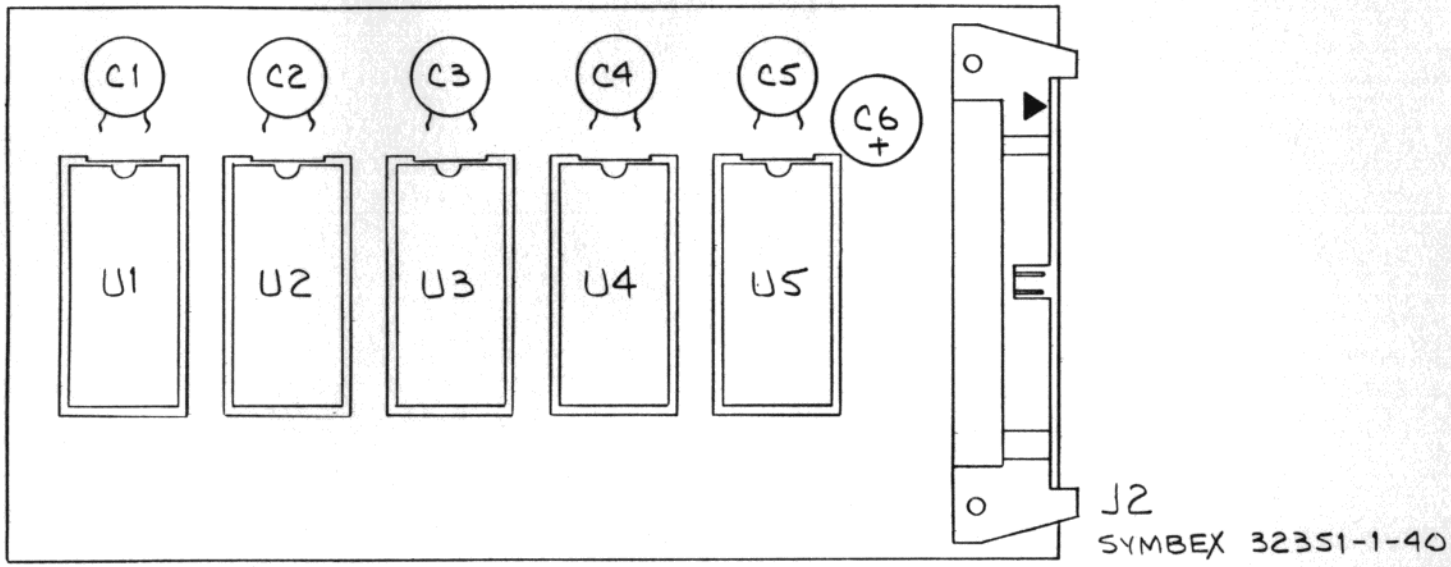

3. DRAGON'S LAIR (81-12056-01): U1-U5, 2764 WITH SOCKET
2. C6; 470 µF, 16 V MINIMUM, ELECTROLYTIC
1. C1-C5; 0.1 µF, 50V, DISC

NOTES: UNLESS OTHERWISE SPECIFIED

MATERIAL:	DRAWN BY: dawscott	DATE 6-83	CINEMATRONICS INC El Cajon Ca. 92020
	PROJECT ENGR:	DATE	DWG TITLE: STARCOM ROM
	RELEASE APPROV:	DATE	
FINISH:	DO NOT SCALE DWG		MODEL NO. / DWG SIZE C / DWG NO. 81-12056-XX / REV A
	TOLERANCE: UNLESS OTHERWISE SPECIFIED		CODE IDENT. / SHEET 1 OF 1
	PROJECTION:	SCALE: 2:1	

BRUNING 40-21 40423

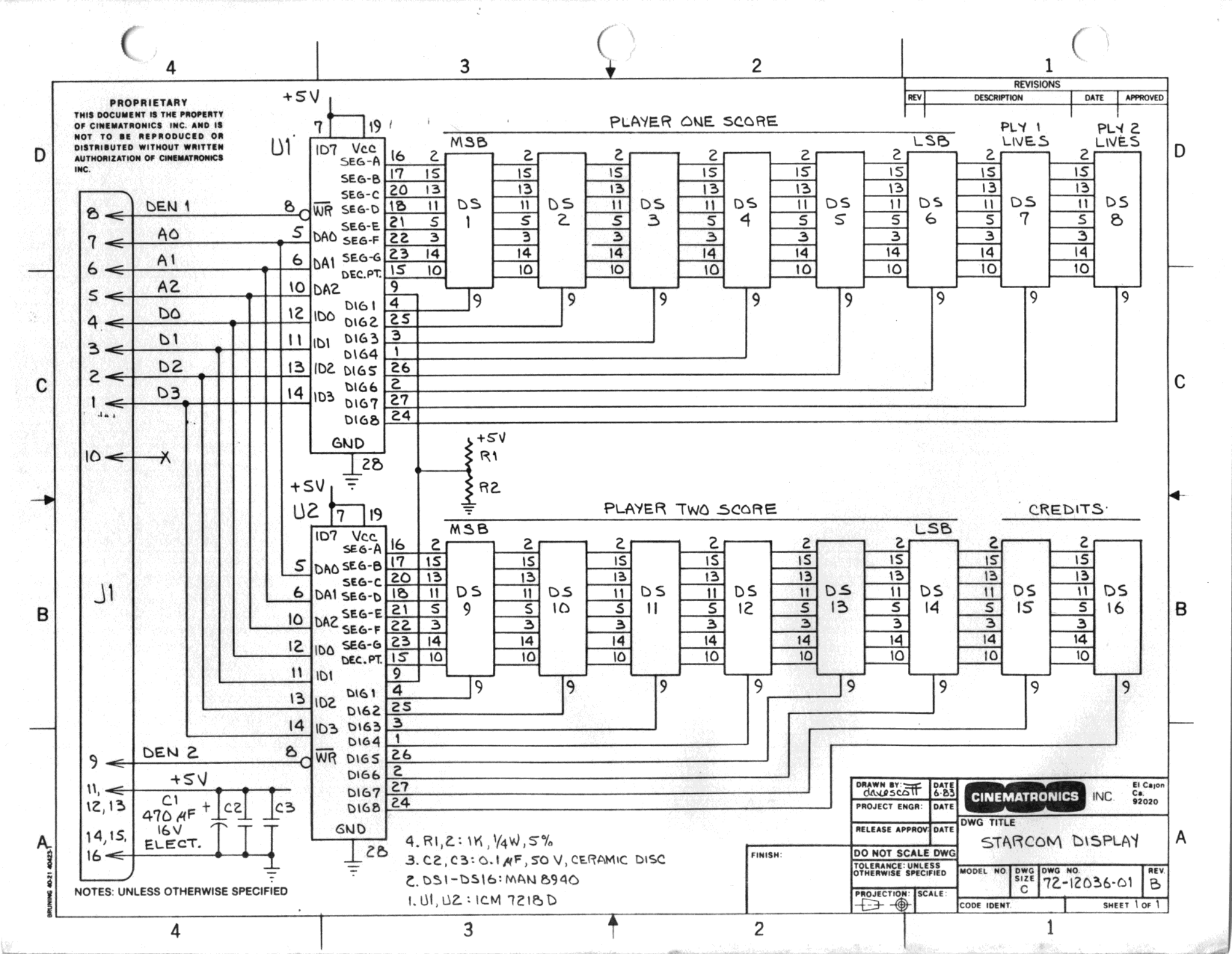
PROPRIETARY
THIS DOCUMENT IS THE PROPERTY OF CINEMATRONICS INC. AND IS NOT TO BE REPRODUCED OR DISTRIBUTED WITHOUT WRITTEN AUTHORIZATION OF CINEMATRONICS INC.
REVISIONS
REV DESCRIPTION DATE APPROVED
PLAYER ONE SCORE
PLAYER TWO SCORE
CREDITS
PLY 1 LIVES
PLY 2 LIVES
MSB
LSB
U1
U2
J1
DS 1
DS 2
DS 3
DS 4
DS 5
DS 6
DS 7
DS 8
DS 9
DS 10
DS 11
DS 12
DS 13
DS 14
DS 15
DS 16
+5V
GND
DEN 1
DEN 2
A0
A1
A2
D0
D1
D2
D3
R1
R2
C1 470 µF 16V ELECT.
C2
C3
4. R1,2: 1K, 1/4W, 5%
3. C2, C3: 0.1 µF, 50 V, CERAMIC DISC
2. DS1-DS16: MAN 8940
1. U1, U2: ICM 7218D
NOTES: UNLESS OTHERWISE SPECIFIED
DRAWN BY: DAVE SCOTT
DATE 6-83
PROJECT ENGR:
RELEASE APPROV:
DO NOT SCALE DWG.
TOLERANCE: UNLESS OTHERWISE SPECIFIED
PROJECTION:
SCALE:
FINISH:
CINEMATRONICS INC. El Cajon Ca. 92020
DWG TITLE
STARCOM DISPLAY
MODEL NO.
DWG SIZE C
DWG NO. 72-12036-01
REV. B
CODE IDENT.
SHEET 1 OF 1

PROPRIETARY
THIS DOCUMENT IS THE PROPERTY OF CINEMATRONICS INC. AND IS NOT TO BE REPRODUCED OR DISTRIBUTED WITHOUT WRITTEN AUTHORIZATION OF CINEMATRONICS INC.

REVISIONS			
REV	DESCRIPTION	DATE	APPROVED
B	ADD R1, R2	9-29-83	

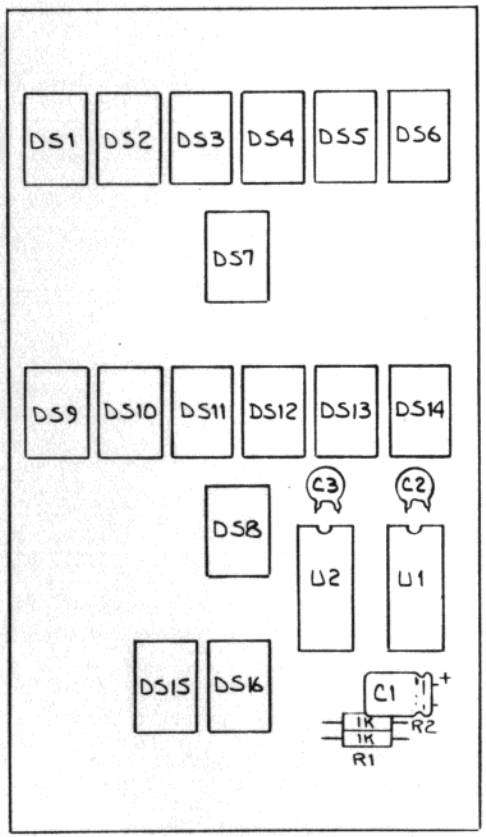

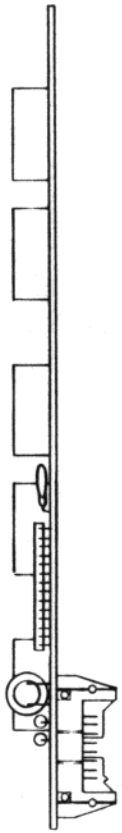

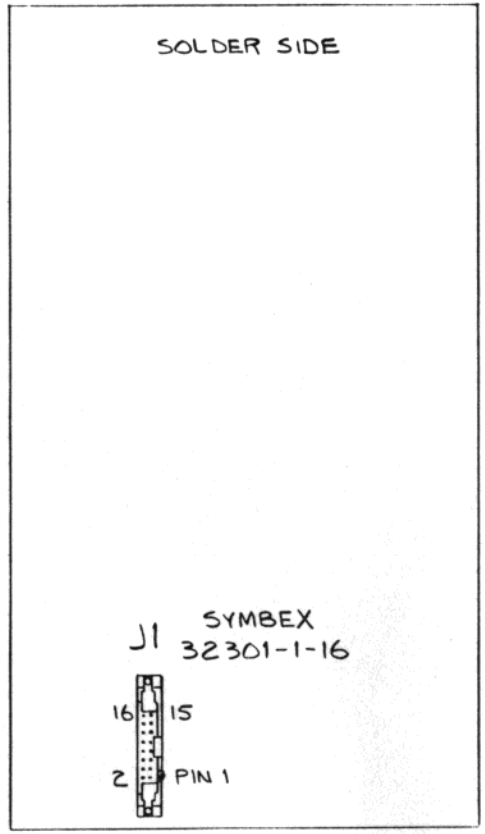

6. CONNECTOR INSTALLED ON SOLDER SIDE OF P.C.B.
5. ALL CAPACITORS TO BE LAYED DOWN
4. C2, C3 : 0.1 μF 50 V DISC 20%
3. C1 : 470 μF ELECTROLYTIC 16 V MINIMUM
2. U1, U2 : ICM 7218 D
1. DS1 - DS16 : L.E.D. MAN8940

NOTES: UNLESS OTHERWISE SPECIFIED

31 MAY 1983

MATERIAL:	DRAWN BY: dawscott	DATE	CINEMATRONICS INC	El Cajon Ca. 92020
	PROJECT ENGR:	DATE	DWG TITLE: STARCOM DISPLAY	
	RELEASE APPROV:	DATE		
FINISH:	DO NOT SCALE DWG			
	TOLERANCE: UNLESS OTHERWISE SPECIFIED		MODEL NO.	DWG SIZE C / DWG NO. 81-12036-01 / REV B
	PROJECTION:	SCALE: FULL	CODE IDENT	SHEET 1 OF 1

BRUNING 40-21 40423

PROPRIETARY
THIS DOCUMENT IS THE PROPERTY OF CINEMATRONICS INC AND IS NOT TO BE REPRODUCED OR DISTRIBUTED WITHOUT WRITTEN AUTHORIZATION OF CINEMATRONICS INC

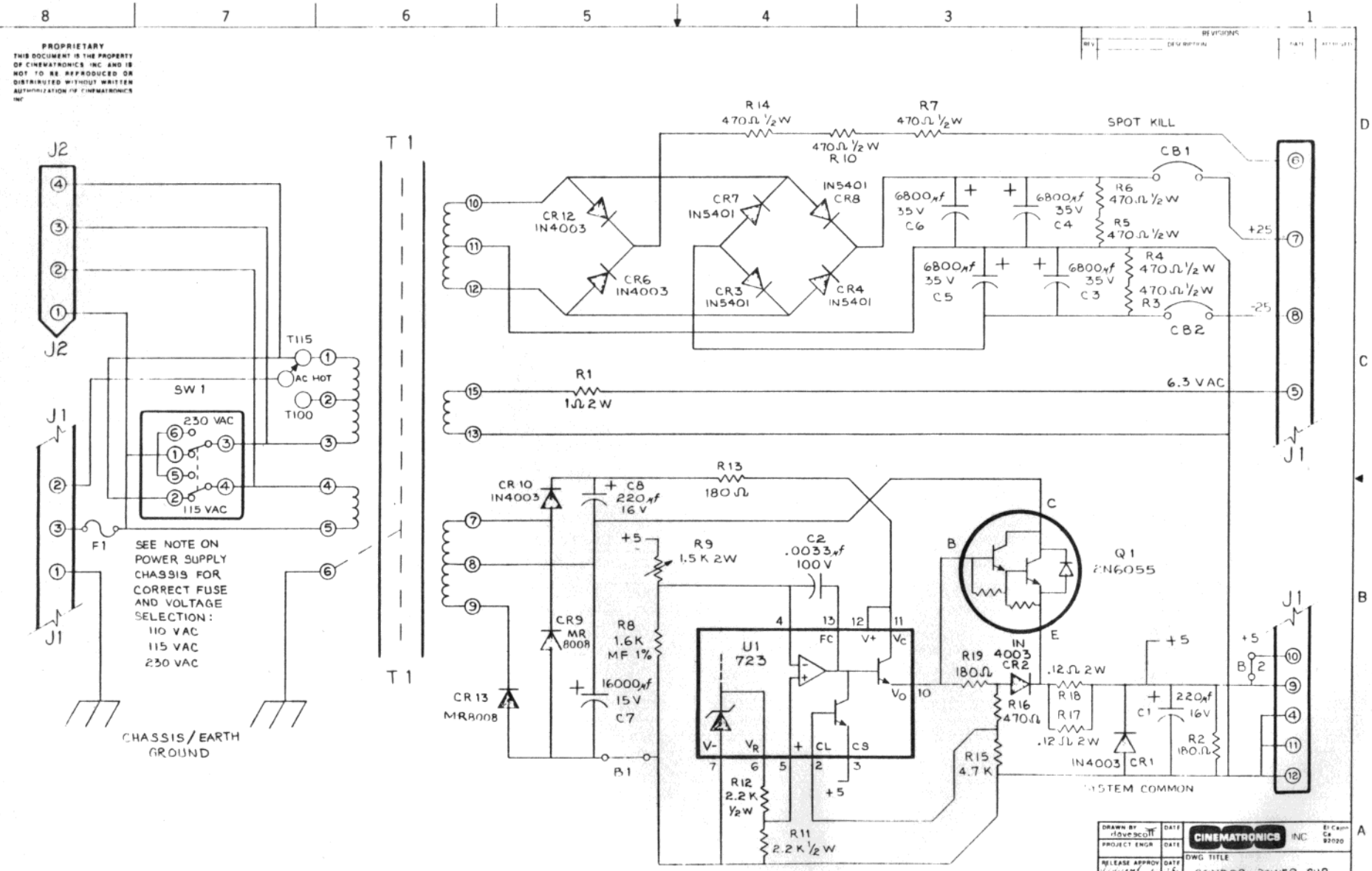

SCHEMATIC SET FOR 115 VAC OPERATION

NOTES UNLESS OTHERWISE SPECIFIED

DRAWN BY	DATE	CINEMATRONICS INC	El Cajon Ca 92020
PROJECT ENGR	DATE		
RELEASE APPROV	DATE	DWG TITLE: CONDOR POWER SUP.	
DO NOT SCALE DWG			
TOLERANCE UNLESS OTHERWISE SPECIFIED		MODEL NO	DWG SIZE D / DWG NO 72-10842-22 / REV A
PROJECTION	SCALE	CODE IDENT	SHEET 1 OF 1

72-10842-22
Condor P.S.

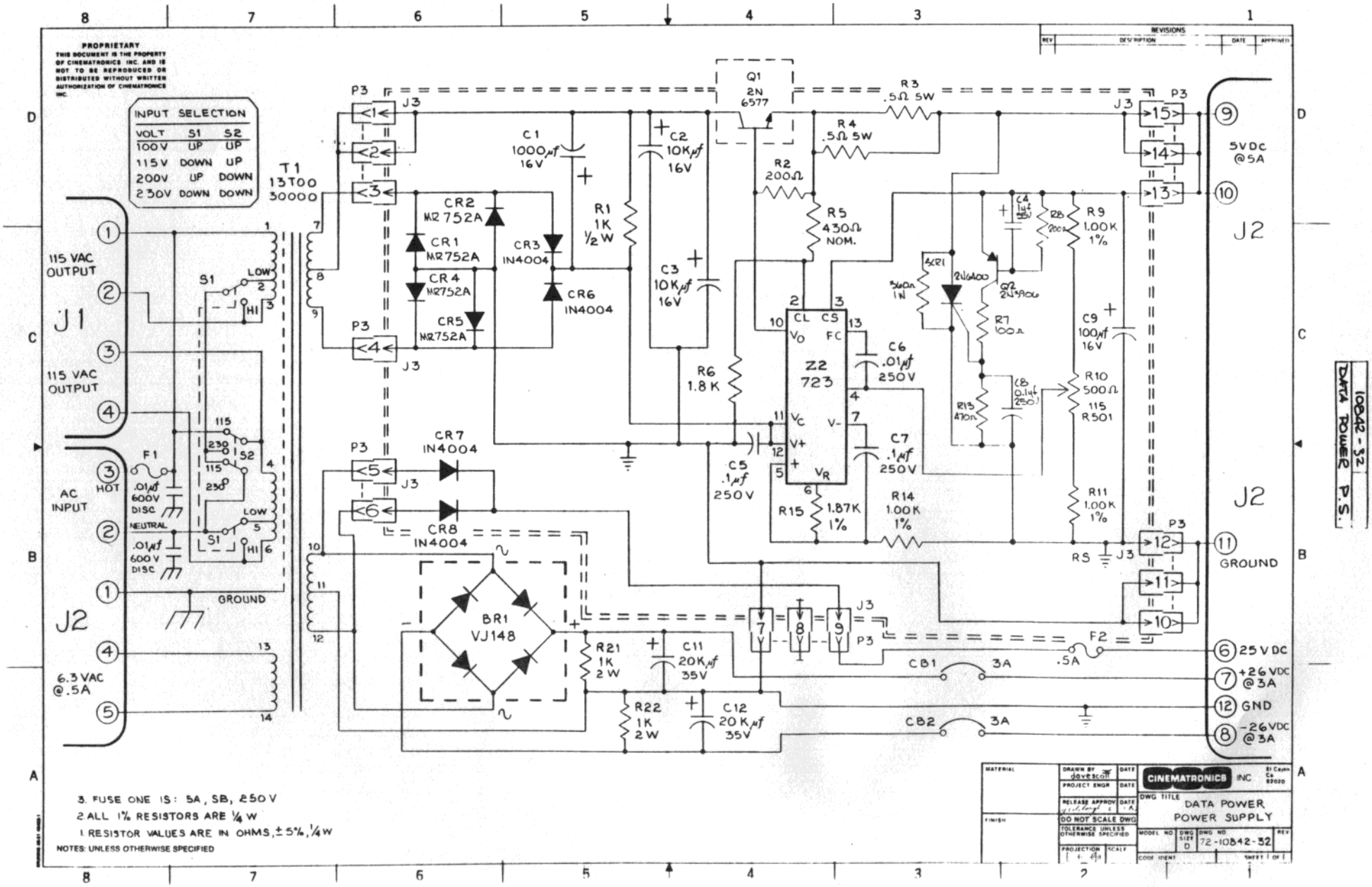
PROPRIETARY
THIS DOCUMENT IS THE PROPERTY OF CINEMATRONICS INC. AND IS NOT TO BE REPRODUCED OR DISTRIBUTED WITHOUT WRITTEN AUTHORIZATION OF CINEMATRONICS INC.
INPUT SELECTION
VOLT S1 S2
100V UP UP
115V DOWN UP
200V UP DOWN
230V DOWN DOWN
115 VAC OUTPUT
J1
115 VAC OUTPUT
AC INPUT
HOT
J2
6.3 VAC @.5A
T1 13T00 30000
S1
S2
LOW
HI
F1
.01µf 600V DISC
NEUTRAL
GROUND
CR1 MR752A
CR2 MR752A
CR3 IN4004
CR4 MR752A
CR5 MR752A
CR6 IN4004
CR7 IN4004
CR8 IN4004
C1 1000µf 16V
C2 10Kµf 16V
C3 10Kµf 16V
R1 1K ½W
Q1 2N 6577
R2 200Ω
R3 .5Ω 5W
R4 .5Ω 5W
R5 430Ω NOM.
R6 1.8K
Z2 723
C5 .1µf 250V
C6 .01µf 250V
C7 .1µf 250V
R15 1.87K 1%
R14 1.00K 1%
R7 100Ω
R8 200Ω
R9 1.00K 1%
R10 500Ω 115 R501
R11 1.00K 1%
R13 470Ω
C8 0.1µf 250V
C9 100µf 16V
C4 1µf 35V
SCR1 2N6400
Q2 2N3906
360Ω 1W
BR1 VJ148
R21 1K 2W
R22 1K 2W
C11 20Kµf 35V
C12 20Kµf 35V
CB1 3A
CB2 3A
F2 .5A
5VDC @5A
GROUND
25VDC
+26VDC @3A
GND
-26VDC @3A
REVISIONS
REV DESCRIPTION DATE APPROVED
3. FUSE ONE IS: 5A, SB, 250V
2. ALL 1% RESISTORS ARE ¼ W
1. RESISTOR VALUES ARE IN OHMS, ±5%, ¼W
NOTES: UNLESS OTHERWISE SPECIFIED
MATERIAL
FINISH
DRAWN BY dovescott
PROJECT ENGR
RELEASE APPROV
DO NOT SCALE DWG
TOLERANCE UNLESS OTHERWISE SPECIFIED
PROJECTION
SCALE
CINEMATRONICS INC
El Cajon Ca 92020
DWG TITLE
DATA POWER POWER SUPPLY
MODEL NO
DWG SIZE D
DWG NO 72-10842-32
REV
CODE IDENT
SHEET 1 OF 1
DATA POWER
10842-32
DATA POWER P.S.

REVISIONS				
ZONE	LTR	DESCRIPTION	DATE	APPROVED
	01	PROTOTYPE	4 DEC 80	RAL
	A	PRODUCTION RELEASE	13 JAN 81	
	B	ADD C9, 10, - SEE ECO 0028 "A"	29 JAN 81	RAL
		DWG. NO. FROM 12A0028-00		

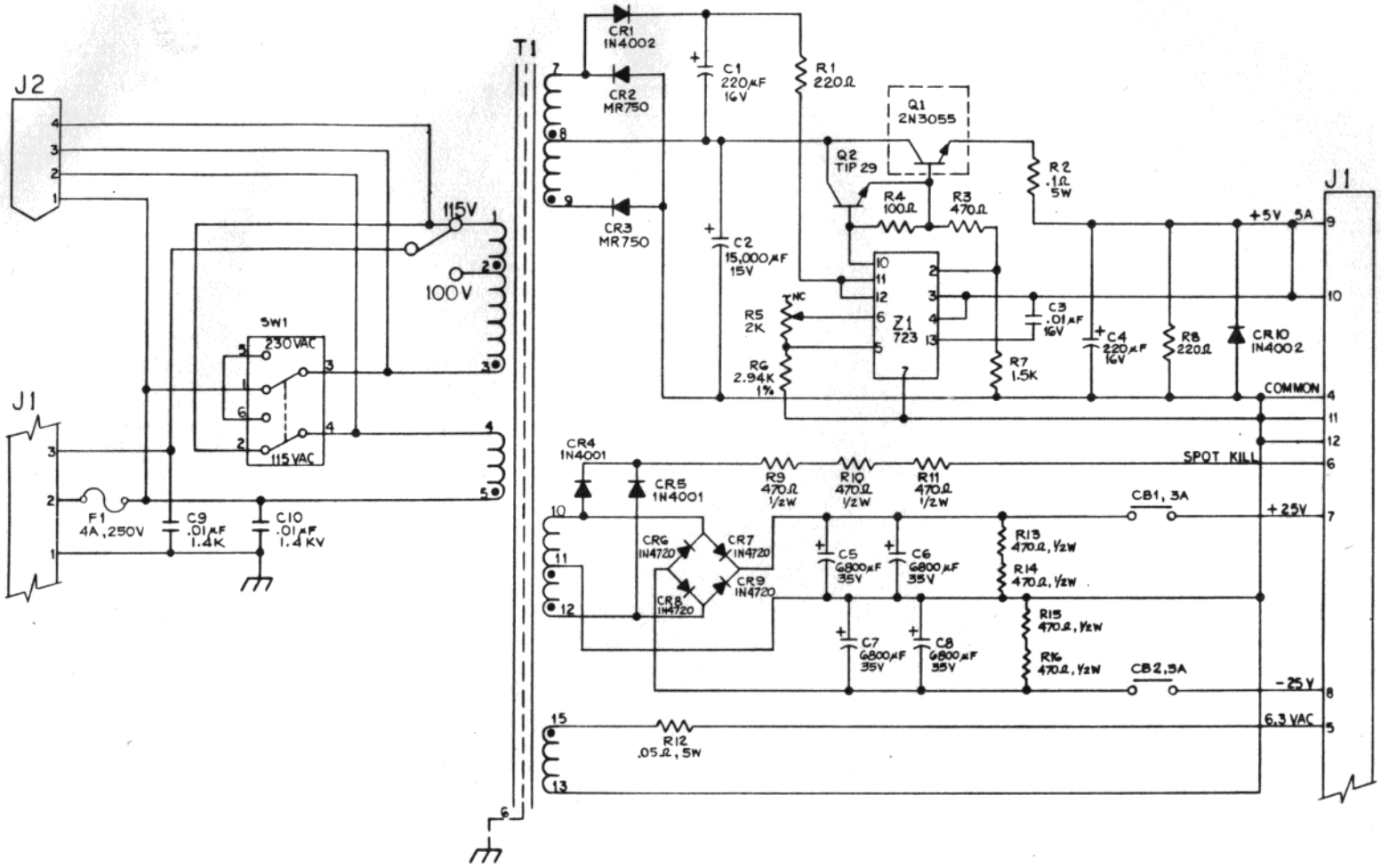

QTY REQD	CODE IDENT	PART OR IDENTIFYING NO.	NOMENCLATURE OR DESCRIPTION

PARTS LIST

UNLESS OTHERWISE SPECIFIED DIMENSIONS ARE IN INCHES
TOLERANCES ARE:
FRACTIONS ± DECIMALS .XX ± .XXX ± ANGLES ±

MATERIAL

FINISH

DO NOT SCALE DRAWING

62A0013-00	0028
NEXT ASSY	USED ON
APPLICATION	

CONTRACT NO.

APPROVALS	DATE
DRAWN C. ESCALERAS	4 DEC 80
CHECKED R. Bashaw	12/4/80

THIS DOCUMENT CONTAINS PROPRIETARY INFORMATION WHICH SHALL NOT BE USED, REPRODUCED OR DISCLOSED TO OTHERS WITHOUT THE WRITTEN PERMISSION OF NATIONAL POWER TECHNOLOGY

NATIONAL POWER TECHNOLOGY

POWER SUPPLY

SIZE	CODE IDENT NO.	DRAWING NO.	REV
C		72-10842-40	B

SCALE NONE SHEET 1 OF 1

BISHOP GRAPHICS/ACI REORDER NO. A 8102

REVISIONS				
ZONE	LTR	DESCRIPTION	DATE	APPROVED
	A	RELEASED PER ECO 0337	1/8/93	[illegible]
	B	RELEASED PER ECO 0420, CHG F1 [illegible]	3/13/93	[illegible]

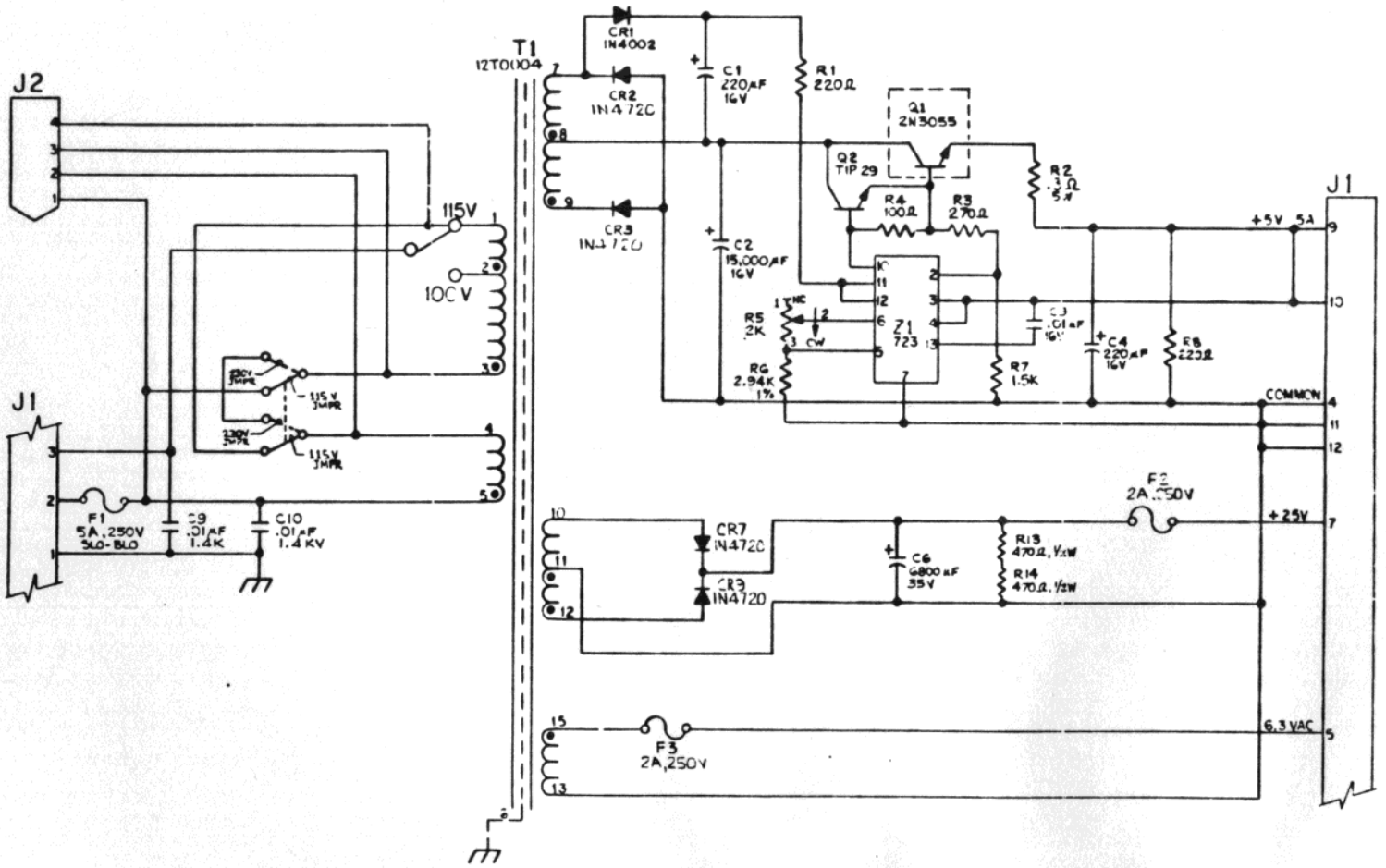

QTY REQD	CODE IDENT	PART OR IDENTIFYING NO.	NOMENCLATURE OR DESCRIPTION

PARTS LIST

UNLESS OTHERWISE SPECIFIED DIMENSIONS ARE IN INCHES
TOLERANCES ARE:
FRACTIONS ± DECIMALS XX ± XXX ± ANGLES ±

MATERIAL

FINISH

DO NOT SCALE DRAWING

CONTRACT NO.

APPROVALS	DATE
DRAWN [illegible]	[illegible]
CHECKED [illegible]	[illegible]

NEXT ASSY	USED ON
02A0067-00	0100

APPLICATION

SCHEMATIC

SIZE	CODE IDENT NO	DRAWING NO.	REV
C		12A0100-00	B

SCALE | SHEET 1 OF 1

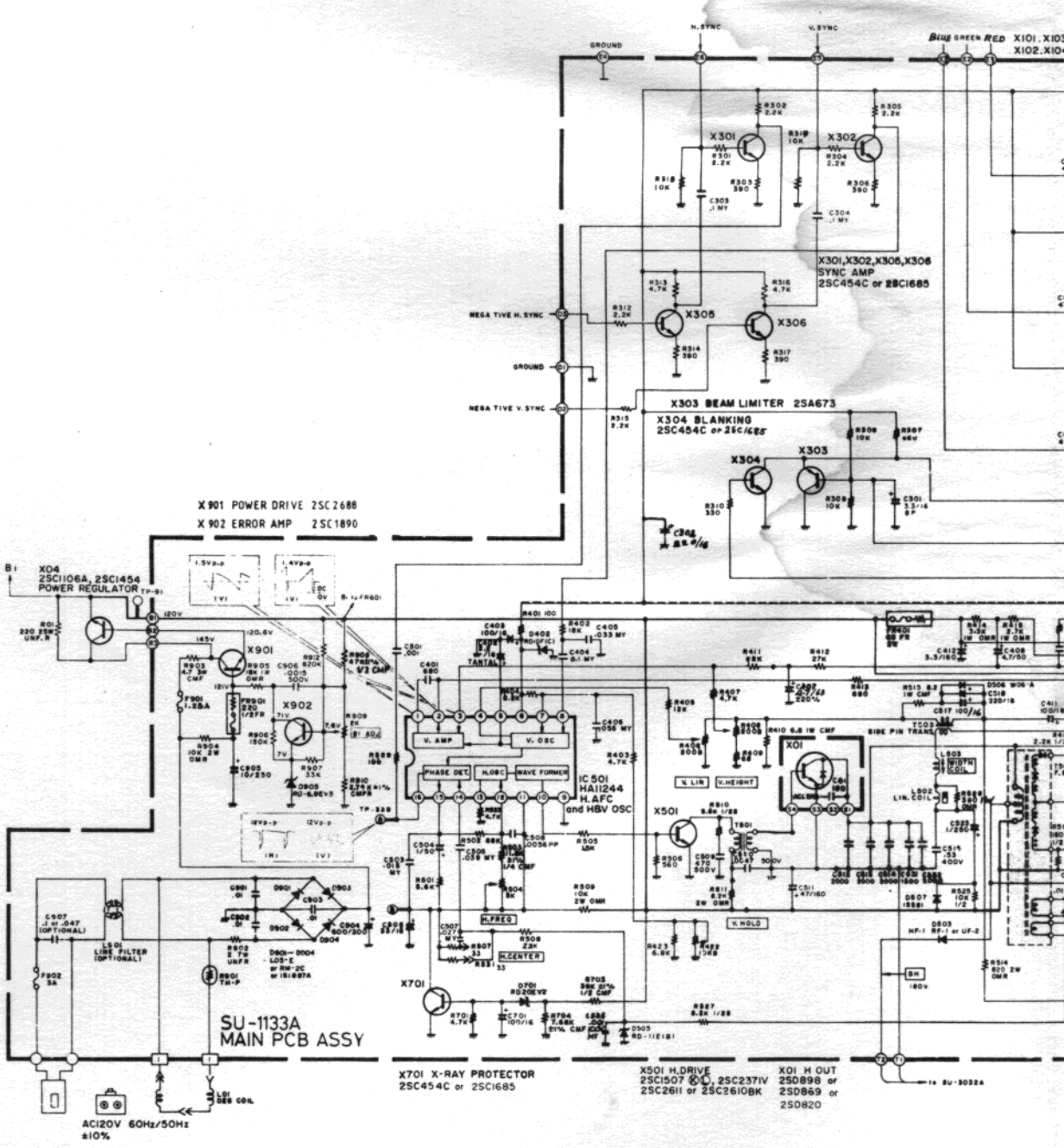
X901 POWER DRIVE 2SC2688
X902 ERROR AMP 2SC1890
X301,X302,X305,X306
SYNC AMP
2SC454C or 2SC1685
X303 BEAM LIMITER 2SA673
X304 BLANKING
2SC454C or 2SC1685
X701 X-RAY PROTECTOR
2SC454C or 2SC1685
X501 H.DRIVE
2SC1507 ⊗⊙, 2SC2371V
2SC2611 or 2SC2610BK
X01 H OUT
2SD898 or
2SD869 or
2SD820
SU-1133A
MAIN PCB ASSY
AC120V 60Hz/50Hz
±10%
IC501
HA11244
H.AFC
and H&V OSC
POWER REGULATOR
LINE FILTER
(OPTIONAL)
V. AMP
V. OSC
PHASE DET
H.OSC
WAVE FORMER
H.FREQ
H.CENTER
V. HOLD
V. LIN
V. HEIGHT
SIDE PIN TRANS.
WIDTH COIL
LIN. COIL
GROUND
H.SYNC
V.SYNC
NEGATIVE H. SYNC
NEGATIVE V. SYNC

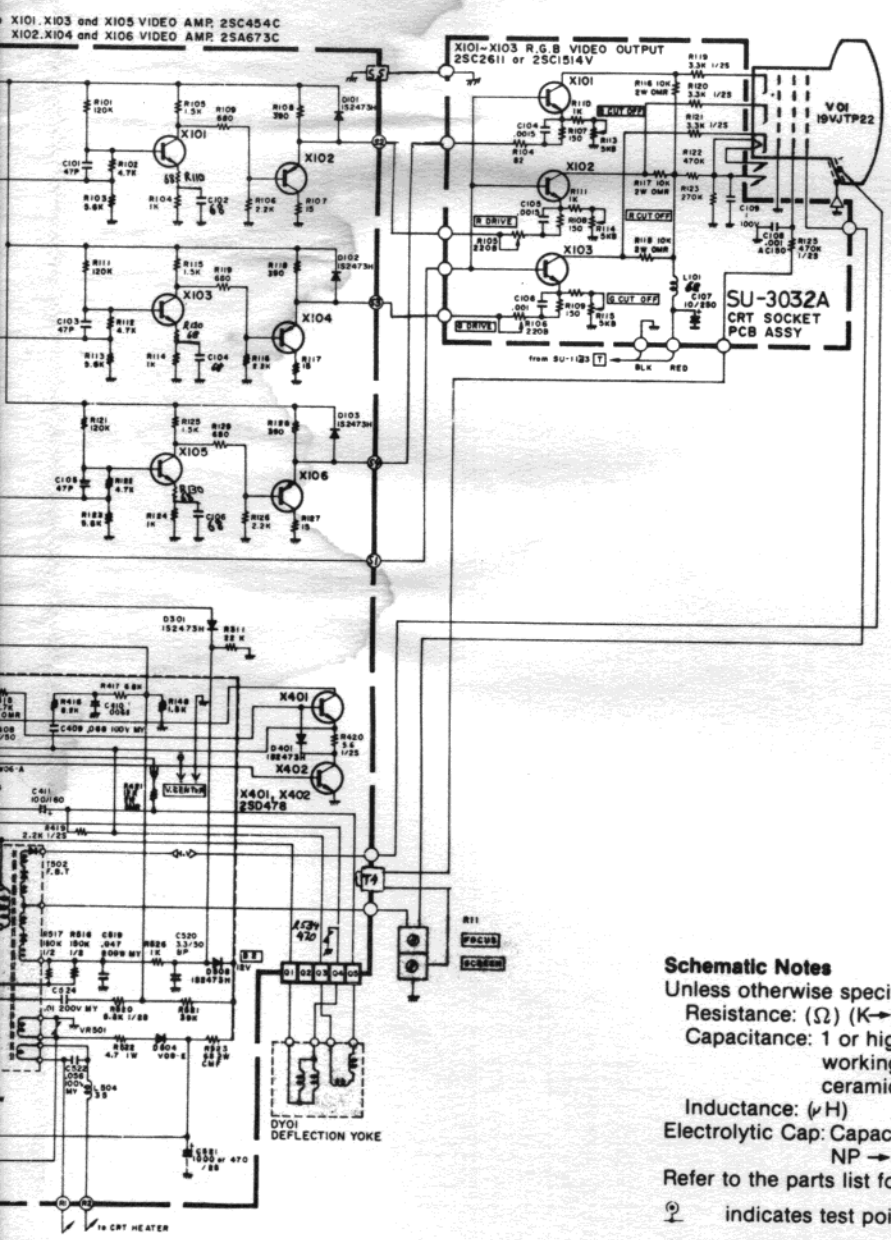

Schematic Notes

Unless otherwise specified

Resistance: (Ω) (K→KΩ, M→MΩ), 1/4 (W) carbon resistor

Capacitance: 1 or higher→ (pF), less than 1→ (μF)
working voltage→ 50 (V)
ceramic capacitor

Inductance: (μH)

Electrolytic Cap: Capacitance Value (μF)/working voltage (V),
NP → non-polar (or bipolar) electrolytic cap.

Refer to the parts list for additional component information.

⏚ indicates test point connection

⏚ indicates chassis ground unless otherwise specified

Hz indicates cycles per second

For **safety** purposes (and continuing reliability)

⚠ replace all components marked with safety symbol with identical type.
NOTE: FR → fusible resistor

Parts identification on circuit boards:
e.g. SU1126A (R107 = R1107)
SU3030A (R113 = R3113)

00-4147-04
G07-CB0

NTSC DECODER SPECIFICATIONS

Pin Outs

P101-1 75 ohm Input
P101-2 Ground
P102-1 Vs Supply (16V)
P102-2 External Tint Wiper
P102-3 External Color Wiper
P102-4 Grount to Control
P102-5 External Detail Wiper
P102-6 Not Used
P102-7 Vcc to Control (12V)
P103-1 Ground
P103-2 Blanking Output
P103-3 Positive Composite Sync.
P103-4 Red Output
P103-5 Green Output
P103-6 Blue Output

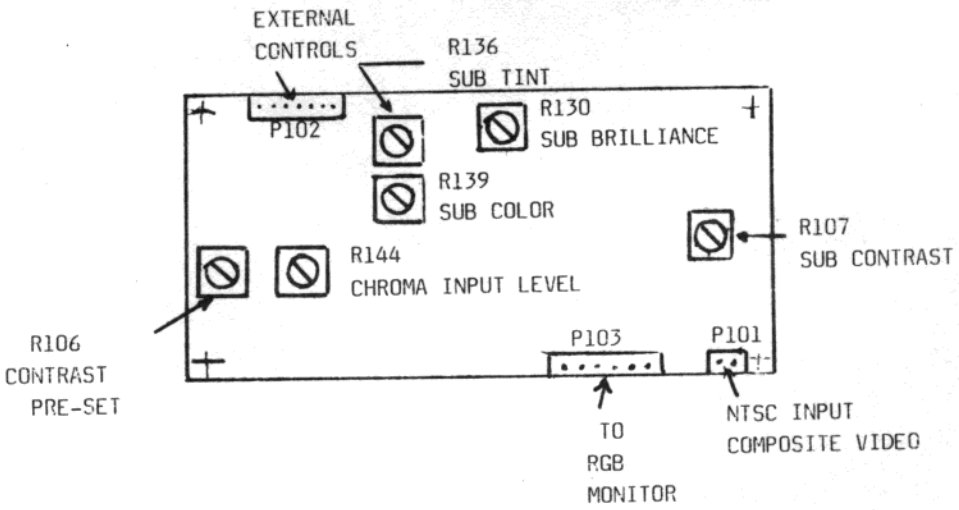

19" COLOR GAME MO

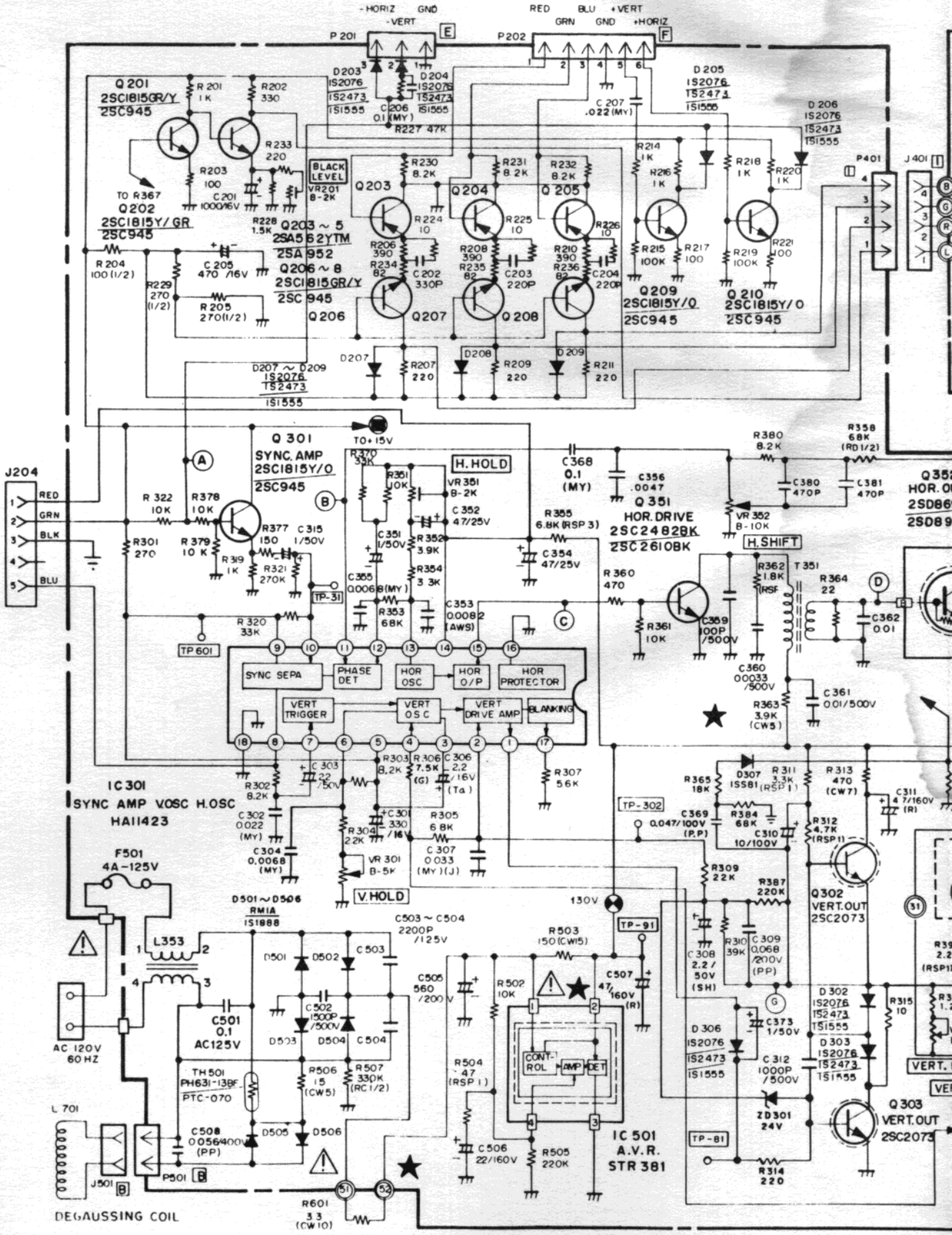

E MONITOR SCHEMATIC DIAGRAM

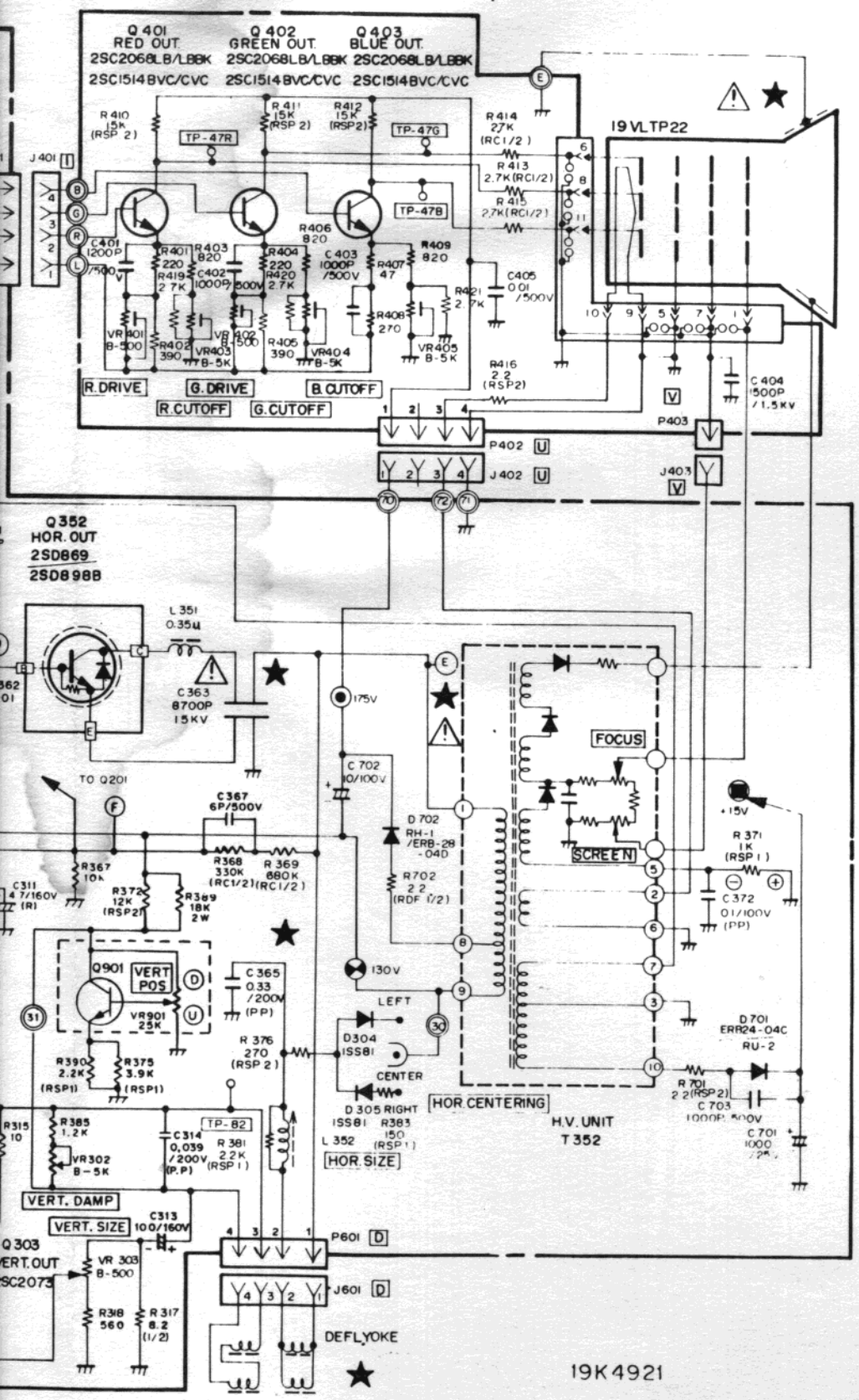

19K4921

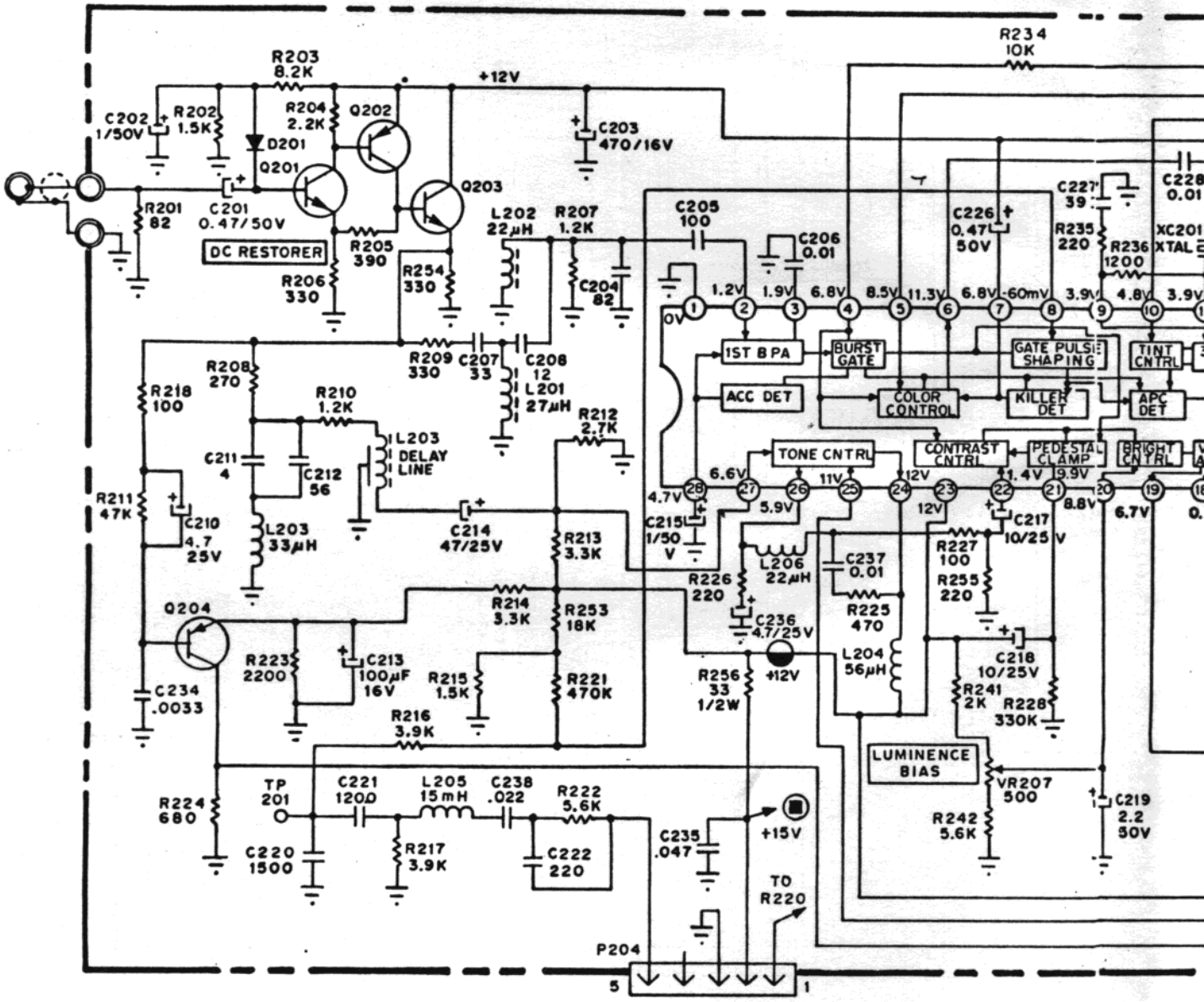

WELLS GARDNER NTSC DECODER SCHE

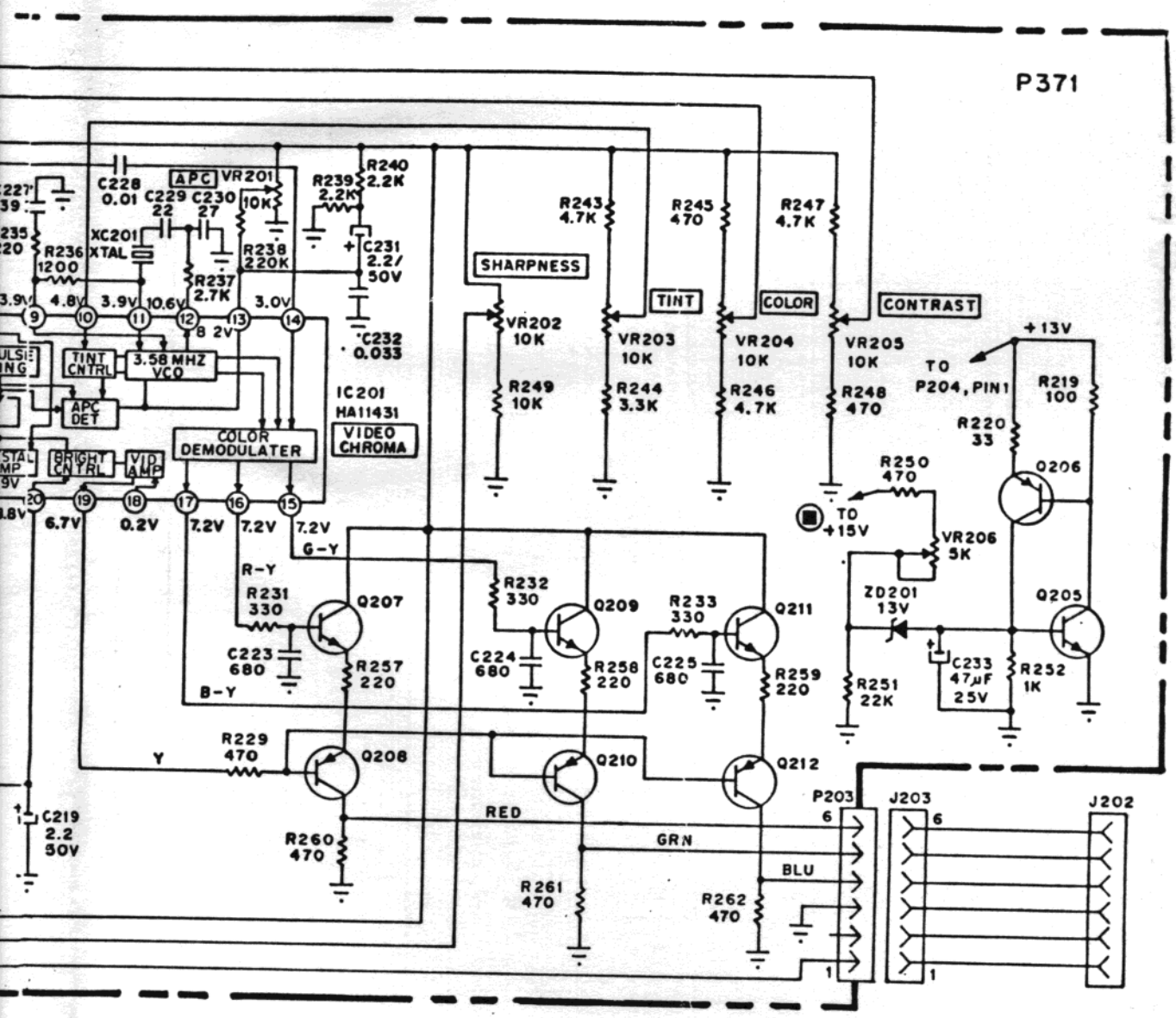

DER SCHEMATIC

1.9.84

MAGICOM WIRING HARNESS

FROM	PIN	TO	PIN	SIGNAL
LF	HOT	SW	COMMON	AC LINE HOT
SW	N/OPEN	PS1	3	AC LINE HOT
SW	N/OPEN	VDP	HOT	AC LINE HOT
LF	NEUTRAL	PS1	2	AC LINE NEUTRAL
LF	NEUTRAL	VDP	NEUTRAL	AC LINE NEUTRAL
PS2	1	ISO	PRI	115V AC #1 HOT
PS2	3	LAMP	HOT	115V AC #2 HOT
PS2	3	FAN	HOT	115V AC #2 HOT
PS2	2	ISO	PRI	115V AC #1 NEUTRAL
PS2	4	LAMP	NEUTRAL	115V AC #2 NEUTRAL
PS2	4	FAN	NEUTRAL	115V AC #2 NEUTRAL
MON	FRAME	LAMP	FRAME	FRAME GROUND
PS1	1	MON	FRAME	FRAME GROUND
LF	FRAME	PS1	1	FRAME GROUND
LF	FRAME	CPU	FRAME	FRAME GROUND
CPU	FRAME	COIN	3	FRAME GROUND
COIN	3	OCP	9	FRAME GROUND
OCP	9	CP	7	FRAME GROUND
PS1	9	CPU	3	+5V
PS1	10	CPU	4	+5V
PS1	11	CPU	7	+5V RETURN
PS1	7	CPU	30	+25V
PS1	12	CPU	8	+25V RETURN
PS1	5	COIN	8	6.3V AC LAMPS
PS1	4	COIN	9	6.3V AC LAMPS RETURN
COIN	1	CPU	10	COIN SLOT 0
COIN	2	CPU	14	COIN SLOT 1
COIN	7	CPU	11	COIN RETURN
CP	2	CPU	6	2 PLAYER START
CP	3	CPU	2	1 PLAYER START
CP	4	CPU	1	JOYSTICK RIGHT
CP	5	CPU	29	SWORD/ACTION
CP	6	CPU	5	JOYSTICK LEFT
CP	8	CPU	9	JOYSTICK DOWN
CP	9	CPU	13	JOYSTICK UP
CP	1	CPU	12	CONTROL PANEL RETURN
OCP	4	CPU	33	COIN COUNTER
OCP	8	CPU	32	COIN COUNTER RETURN
OCP	3	VDP	CENTER	DISC AUDIO (LEFT)
OCP	1	VDP	SHIELD	DISC AUDIO RETURN (LEFT)
OCP	5	VDP	CENTER	DISC AUDIO (RIGHT)

OCP	7	VDP	SHIELD	DISC AUDIO RETURN (RIGHT)
OCP	2	CPU	24	VOLUME OUT (LEFT)
OCP	1	CPU	23	VOLUME OUT RETURN (LEFT)
OCP	6	CPU	16	VOLUME OUT (RIGHT)
OCP	7	CPU	15	VOLUME OUT RETURN (RIGHT)
CPU	28	SPKR	L+	SPEAKER (LEFT)
CPU	27	SPKR	L-	SPEAKER RETURN (LEFT)
CPU	20	SPKR	R+	SPEAKER (RIGHT)
CPU	19	SPKR	R-	SPEAKER RETURN (RIGHT)

PS1 = POWER SUPPLY 12 PIN CONNECTOR
PS2 = POWER SUPPLY 4 PIN CONNECTOR
FAN = COOLING FAN
SW = POWER SWITCH
CPU = LOGIC BOARD
LAMP = FLORESCENT LAMP
CP = CONTROL PANEL
SPKR = SPEAKERS
COIN = COIN DOOR
MON = MONITOR
VDP = VIDEODISC PLAYER
LF = AC LINE FILTER
OCP = OPERATOR CONVENIENCE PANEL
ISO = MONITOR ISOLATION TRANSFORMER

NOTE: GAMES EQUIPPED WITH PR7820 DISC PLAYERS HAVE DISC PLAYER FRAME GROUND TIED TO LINE FILTER FRAME GROUND.