16-4001-K-101
May 1989

Bally/MIDWAY™

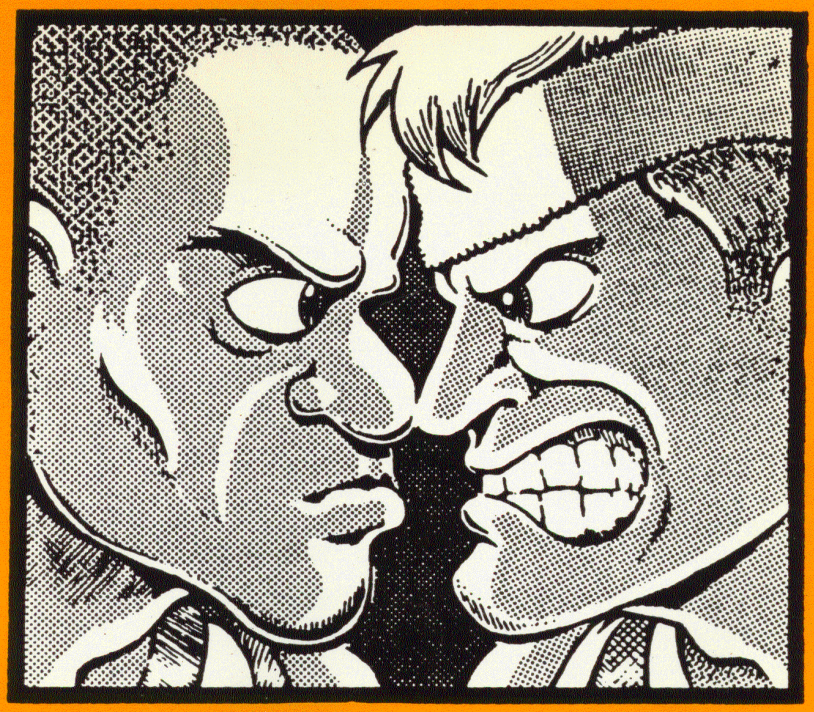

ARCH RIVALS

kit installation and operation manual

HOMETOWN HEROES OPTION - HOW TO CUSTOMIZE YOUR GAME

1. PUT GAME IN TEST MODE:
   a. Pull out diagnostic switch inside coin door.
   b. Activate TILT switch.

2. SELECT "HOMETOWN HEROES" OPTION:
   a. Use left player control button.
   b. Move cursor (ball) to "HOMETOWN HEROES".
   c. Press 1 or 2 PLAYER button.

3. Turn on switch 6 on game board.

4. Select item to update:
   a. Use left player control button.
   b. Move cursor (ball) to item to update.
   c. Press 1/2 PLAYER or ANY left player buttons.

5. Team Updates (SELECT "NEW COLORS/NEW NAMES"):
   a. 1 player button for "NEW COLORS".
   b. 2 player button for "NEW NAME".

6. NEW COLORS:
   a. Move left player joystick to change colors.
   b. Press any left player button to save.
   c. TILT to abort.

7. NEW TEAM NAME:
   a. Move left player joystick to change LETTER.
   b. Press any left player button to save LETTER.
   c. Use (<--------) to ERASE.
   d. Clear out all unwanted letters.
   e. Move to "DONE" and press button to save.
   f. TILT to abort.

8. TO CHANGE "PRESENTS" SCREEN:
   a. ENTER NAME AS YOU WOULD LIKE IT TO APPEAR
      1. CENTER NAME OVER "PRESENTS"
         USE SPACE or (<------>).
   b. Move left player joystick to change LETTER.
   c. Press any left player button to save LETTER.
   d. Use (<-------) to ERASE.
   e. Clear out all unwanted letters.
   f. Move to "DONE" and press button to save.
   g. TILT to abort.

TABLE OF CONTENTS

Notices and Warnings 1

Installation
- Cabinet Modifications 3
- Control Panel Modifications 3
- Installing the Interboard Wiring 4
- Installing the FCC Cage 5

Game Play 6

Dignostics and Adjustments 7
- Dip Switch Settings 9

Troubleshooting
- General Operation 10
- Simplified Block Diagram 13
- Detailed Block Diagram 14
- Troubleshooting Chart 15
- Jamma/Joystick Cable Chart 17

Decal Locations 18

Joystick Wood Spacer Diagram 19

Volume Control Wiring 20

Diagnostic (Test) Switch Wiring 21

Circuit Board Schematics and Parts Lists
- 68000 Video Game Board 22
- Music Board 34
- Jamma Interface Board 36

Interboard Wiring Diagram 38

Kit Parts List 41

ROM Summary 42

Notices and Warnings

Notice

Parts salvaged from an old game are required to complete your kit. These salvaged parts *must* operate perfectly or the converted game cannot perform properly or safely. Always repair circuit board malfunctions and cabinet damage before conversion is attempted.

These parts are:

1. A Power Supply capable of +5V DC at a minimum of 7A; -5V DC at a minimum of 1A and +12V DC at a minimum of 1A. These operating voltages are necessary for your kit. Your Power Supply must be FCC approved.

2. A Monitor with a horizontally mounted CRT that is capable of 16KHZ and Raster electronics with inputs for red, green, and blue video, as well as composite sync.

Warning

Use of Non-*Bally Midway* Parts or Circuit Modifications May Cause Serious Injury or Equipment Damage. Use Only *Bally Midway* Authorized Parts.

1. For safety and reliability, substitute parts or modifications are not recommended.

2. Substitute parts or modifications may void FCC type acceptance.

3. This game is protected by federal copyright, trademark and patent laws. Unauthorized software or hardware modifications may be illegal under Federal law. This law also applies to *Bally Midway* logos, designs, publications, and assemblies. Moreover, facsimiles of *Bally Midway* equipment (or any other feature thereof) may be illegal under Federal law, regardless of whether or not such facsimiles are manufactured with *Bally Midway* components.

Warning

Prevent Shock Hazard and assure proper operation. Only plug this game into a properly grounded outlet. Do not use a cheater plug to defeat the powers cord's ground pin. Do not cut off the ground pin.

Important

Check the Arch Rivals kit for an FCC sticker and apply it over the existing sticker on the cabinet. When *Bally Midway* ships a game, it is in compliance with FCC regulations. Your sticker, is proof. If your sticker is missing or damaged, legal repercussions to the owner or distributor of the game may result. If your game doesn't contain a FCC sticker contact your *Bally Midway* distributor immediately.

Warning

This equipment generates, uses and can emit radio frequency and, if not installed properly and used according to the directions in this manual, may cause interference to radio communications. It has been tested and found to comply with the limits for a Class A computing device pursuant to Subpart J of Part 15 of FCC rules which are designed to provide reasonable protection against such interference when operated in a commercial environment. Operation of this equipment in a residential area is likely to cause interference to radio communications, in which case the user, at his or her own expense, will be required to take whatever measures may be needed to correct the interference.

Disconnect power during set-up and repairs. To avoid electrical shock, disconnect the game from the AC power source before removing or repairing any part of this game.

Installation

Cabinet Modifications

1. First, inspect your old cabinet. Remove foreign objects and fill in gouges with a good quick-hardening wood putty. Sand cabinet and wipe it clean.

2. Repaint the cabinet with black semi-gloss paint, (for games with wood grain sides: remove the old decals and clean the glue residue from the old decal). Allow to dry and set.

3. Pencil a line roughly at the top of the old graphic. Lightly moisten the cabinet with soapy water or glass cleaner. Apply the decal starting at the top and working down. After the decal is in place, use a piece of the foam packaging as a squeegee and smooth the decal down, taking care to squeeze out the air bubbles. If you miss an air bubble, pop it with a razor blade or a pin and burnish it down. Allow 12 hours for the adhesive to set. Remove masking.

4. Position the FCC sticker near the power cord.

5. Apply the CRT overlay to the glass covering the CRT.

6. Apply the instruction decal.

Control Panel Modifications

1. Remove the control panel buttons, joysticks, and the old vinyl covering .

2. Place the panel template on the control panel, and use it to help you align your control panel.

3. Leave your 1 and 2-Player buttons where they are. Drill holes as needed for the joysticks and other buttons. Plug any old holes with wood blocks, putty, cardboard, or epoxy. File the new holes smooth.

4. Carefully remove the backing on the vinyl control panel overlay. Place the overlay on top of the control panel. Assure that no air bubbles get under the vinyl overlay.

5. After the overlay has been securely applied, use a razor knife to cut holes for the buttons and joysticks. Player-1 and Player-2 START stickers go next to the appropriate buttons. A joystick direction decal goes around the joystick opening. Position Pass/Punch/Steal, and Shoot/Block stickers according to the template.

6. To mount the joystick assembly to the control panel, first push the joystick shaft and handle through the control panel from the back. If you have a metal control panel, or if the joystick protrudes too far out of the hole, insert the wood spacer included with your kit between the joystick mounting bracket and the control panel.

Once you have positioned the joystick, attach it to the back of the control panel with the Phillips screws provided. Repeat the procedure for the remaining joystick.

7. To mount push buttons to the control panel, insert the buttons through the control panel from the top and secure into place with mounting nuts provided with your kit.

8. Next, attach the blade switches to the control panel. Start by positioning the switch so that the long blade just covers the round tab on the bottom of the push button. The short blade should be facing you, not the control panel. Secure into place with Phillips screws.

9. After all control panel components are installed, attach the protective cover. It may be necessary to cut holes to accommodate the control panel components.

Installing the Interboard Wiring

1. Disconnect the old wiring harness from the CPU board. Use the schematic drawing from your old game to carefully note the function of each wire. Label the wires, if it will help to do so.

2. Carefully remove the circuit boards and the metal circuit board panel. Leave the transformer chassis in the game.

3. Leaving several inches of wire at each connector, cut the wires near the coin door, monitor, player panel, power supply, and speaker. *Do not cut the other side of these wires. That is, the side that is connected to the CPU should not be cut.*

4. Following the Wiring Diagram Schematic or the Jamma/Joystick Cable chart, solder the coin door, monitor, player panel, power supply, and speaker wires to the Jamma/Joystick Cable. Using electrical tape, be sure to insulate all splices.

5. The cables for the joysticks plug into the PC boards that are part of the joystick assembly. The cable for the left joystick has orange wires. The cable for the right joystick has yellow wires.

6. If your game has a series-pass transistor for the power supply on a separate heatsink, remount the metal heatsink beside the power supply board.

7. Check and clean the input jack on the power supply board. Replace any burned or damaged pins.

8. Install diagnostic (test) and tilt switches according to the Wiring Diagram Schematic. You may find it convenient to install the tilt switch in the coin door and the diagnostic switch on top of the cash box.

Installing the FCC Cage

1. Use the screws supplied to mount the FCC cage inside the game either on the back door or on one of the walls. Do not open the FCC cage while installing it.

2. Remove one mounting screw from each of the following: the transformer, the power-supply board, the cage, and the mounting plate for the FCC cage. Attach the ground braid between each one of these and replace the screws. The cage and the mounting plate for the FCC cage must be grounded separately.

3. Plug the Main Harness into J1 of the Jamma Interface Board. Support the cable as necessary with plastic wire guides. Jack J5 on the Jamma Interface Board is the connection for Player-1 Joystick and has a cable with mostly orange wires plugged into it. The other end is plugged into the Player-1 Joystick PC Board. Jack J4 on the Jamma Interface Board is the connection for the Player-2 Joystick and has a cable with mostly yellow wires plugged into it. The other end is plugged into the Player-2 Joystick PC Board.

Game Play

Starting Up

Turn the game on. After the player inserts the required number of coins, the game exits the attract mode and enters the play mode. Play mode halts until the one-player or two-player CREDIT button has been hit. After the player selects the ARCH RIVAL character for the game, game play will commence.

Player Controls

Credit Buttons designate one-player or two-player modes.

Joystick allows the player to assume 49 positions and move in 4 directions.

White Buttons allow the player to Pass in offense and Punch or Steal in defense.

Red Buttons allow the player to Shoot in offense and Block in defense.

Scoring

The game basically follows the same rules as basketball. Two points are awarded for each completed basket shot. Three points are awarded for completed shot outside the three-point line. The game does not account for fouls, so players are encouraged to use the Punch feature to make the game more enjoyable.

Ready-To-Play Mode

The Ready-To-Play mode begins when proper coinage has been accepted in the coin slot. During this mode the game will ask the player(s) to press the one-player or two-player Credit button. After the Credit button has been pressed, player will get a chance to pick a character to represent them in a game. After selecting a character press the Shoot or Pass button to proceed into game play. If a character is not selected the game will assign one automatically.

Play Mode

The Play Mode begins for each player when the Shoot or Pass buttons have been pressed. The Play Mode ends for each player when game time runs out. "Video Time Out-Insert Coin" appears on the screen, signaling the player to insert another coin to continue game play. The player has 15 seconds to insert another coin to continue the game that was already started. After 15 seconds, the Play Mode will start with a new game.

Offensive Play

To Shoot or Pass, press the appropriate button. To "fake out" an opponent, hold the button down longer. If your teammate is holding the ball, you can "tell him" to Shoot or Pass by pressing the appropriate button.

Defensive Play

To Block, press and release the shoot button. To Steal, aim your player at the ball, and press either Pass button.

Diagnostics and Adjustments

Diagnostic Mode

By pulling the white diagnostic switch and pressing the tilt switch, the operator can enter the Diagnostic Mode. The Diagnostic Mode can be entered at any time from any mode of operation.

Once in Diagnostics, the operator has access to several features and self-test operations. These are shown on the screen. Use Player Joystick the move cursor. Press 1 or 2 Player Button to start the test.

Self-Test

This test is designed to locate and identify any computer malfunctions. When selected, the game enters this mode immediately and begins scanning its memory. The phrases "PASSED TEST" or "FAILED TEST" will appear on the screen depending on whether the test was successful or not.

"Hometown Heroes"

The operator has the capability to program names and colors of his choice for four different teams which his game will feature. Having entered into "Hometown Heroes", select the team that is to have their name and/or colors updated using the left joystick. Press the Credit Button to proceed. The game requests the operator's choice between NEW COLORS and NEW NAME, (Press the two-player Credit Button for NEW NAME, or the one-player Credit Button for NEW COLORS). Both of these items may be changed, but only one at a time. Again, press the Credit Button to proceed. When programing the new information, use the joystick to select your choice, and press the Shoot Button to enter that choice.

Reset High Scores

The game automatically clears High Scores when either Credit Button is pressed.

Switches

The Switch and Sound Self-Test mode allow the operator to determine if all game switches, sound features, and the opto-board controlled joysticks are operating properly. The operator can activate switches one at a time and check the monitor screen to see if they are acknowledged.

Sounds

The two Credit Buttons activate the Sound-Test during the Switch-Test mode. Press the one-player Credit Button to run through the music features and the two-player Credit Button to test the speech functions.

Joysticks

To assure that the joysticks are operating properly, while in the Switch Test mode, check to see that they can be moved for three units in all of the appropriate (up, down, left, right) directions.

Grid

The Convergence Grid Display Test displays a crosshatch pattern to aid in adjusting the color monitor. This pattern is useful in adjusting the color balance, convergence, vertical linearity, and vertical/horizontal sizing. To exit this test, press the Tilt switch.

DIP Switch

All game options are adjustable by changing the bit switch settings on the DIP Switch unit (on the 68000 Video Board in location 12A). The DIP Switch unit combines ten bit switches, which are set to the On or Off position. When you enter this test mode, the screen shows a full display of current DIP Switch settings.

Arch Rivals

OPTION (DIP) SWITCH SETTINGS TABLE

	SW 1	SW2	SW3	SW4	SW5	SW6	SW7	SW8	SW9*	SW10
GAME TIME: Preset Preset + 10 sec Preset + 20 sec Preset + 30 sec	OFF ON OFF ON	OFF OFF ON ON								
COIN CHUTES: 1 Coin;1 Credit 2 Coins;1 Credit 3 Coins;1 Credit 2 Coins;3 Credit 1 Coin; 2 Credits 1 Coin; 3 Credits 1 Coin; 5 Credits 1 Coin; 6 Credits			OFF ON OFF ON OFF ON OFF ON	OFF OFF ON ON OFF OFF ON ON	OFF OFF OFF OFF ON ON ON ON					
"HOMETOWN HEROES": Progammed Default Teams						ON` OFF				
ATTRACT SEQUENCE SOUNDS: Sounds No Sounds							OFF ON			
Free Game No Free Game								ON OFF		
FREEZE SW: Freeze Mode Normal Operation										ON OFF

* Switch 9 : Not Used

Troubleshooting

General Operation

The following section gives a brief overview of the ARCH RIVALS computer system. A troubleshooting chart is located at the end of this section. The chart may help the operator locate a faulty component quickly.

68000 Microprocessor

The computer in your Arch Rivals game is controlled by a Motorola 68000 microprocessor. Microprocessor chip 4E is on the CPU Board. This chip has 32 address lines and 16 bidirectional data lines. As with other microprocessors, each of these lines corresponds to an address or data bit.

Local Memory Devices

Local ROM. The Game program is in Local ROM chips 2B, 2C, 3B, and 3C. Also stored in this ROM is staging data used in the game's Foreground Packet Section.

Local RAM. The microprocessor uses Local RAMs 4B and 4C, when it processes program or peripheral data. RAM chip 4B contains the eight "low" bits, while chip 4C holds eight "high data bits".

Image Storage

Your game stores image data in three places. Two of these control foreground graphics; a third furnishes background image.

Foreground Packet Section. The first section is a library of details about foreground (moving character) images. Because these details are packetized, this section is called Foreground Packet Section. The system computes such details or retrieves them from Local (program) ROM. These details may involve a character's position in the screen. They may also specify the group of colors for its display. However, digitized image description (called bit maps) are stored and manipulated elsewhere.

Foreground Bit Map Section. The second section is the Foreground Bit Map Section. This includes a Foreground Image ROM for game foregrounds including characters. The Foreground Image ROM is composed of chips 7J through 10J. This ROM stores the bit map of characters such as basketball players and cheerleaders.

Background Section. Game backgrounds (scenery) are in the background section. On command, Background Pixel PROM 11D/12D passes a scene to Background Pixel RAM 13E.

How They Produce Video. How do the three sections work together? The microprocessor loads an appropriate image pixel into Foreground or Background RAM. Packet RAM distributes additional foreground image details. Then, under microprocessor control, image pixels are combined at a switcher. (This switcher

appears on schematics as the "Color Arbiter"). Switcher 7A/8A/8B/9B determines whether a foreground or background pixel should fill an area of screen.

Color Ram

Between the Switcher and the screen, pixel data addresses a Color RAM. This mapping process substitutes color data for pixel data. Color RAM 4A produces three bits each of red, green, and blue data.

Discrete Video DAC

Resistors and Transistor. Color RAM output bits arrive at three PNP transistors Q5, Q7, and Q9. Between the buffer and each transistor, each bit is fed through a different value resistor. These resistors determine how intensely each transistor will turn on. The resistors form a discrete digital-to-analog converter (DAC). Three resistors join each transistor's base to Color RAM outputs. Because the Color RAM produces nine output bits, each resistor corresponds to one bit.

The high bit turns the color transistor on the hardest. The middle bit turns the transistor on half as hard. And the low bit turns the transistor on one quarter as hard.

The outputs of the three transistors become the red, green, and blue components of a pixel. The game feeds these outputs to a computer monitor for screen display.

Video Blanking. Driven by a clock signal and inverted by gate 1A. The blanking output of NPN transistor Q3 allows or disables current flow through the red, green and blue transistor outputs.

Sound Link

The Jamma Interface Board links the game computer to the Sound Board. The CPU Board specifies sounds that the Sound Board must produce. Sound specifications consist of 10-bit, TTL sound-selection and strobe data. An eleventh bit permits the CPU Board to reset the Sound Board.

PAL and PLA Devices

What they are. Your game produces many of its control functions in programmable logic arrays. Depending on the type, these chips are shown on schematics as PLAs or PALs. Although they contain certain programmable hardware, these devices are related to PROMS.

No Substitutes. Because PALs and PLAs must be programmed, part substitution isn't possible. If you need a part you must order in from *Bally Midway.*

Color Arbiter. The most important PAL is chip 9B, the "Color Arbiter" that presides over video switching. It select a foreground or background video pixel for screen display. This PAL is the only programmable logic array that's directly in the pixel data path. The other PALs and PLDs manipulate control signals.

Foreground Packet Control. The Foreground Packet Control receives many control signals from Foreground Packet Control PLA 11J/12J. Outputs of these two chips feed through latch 11K/12K. Resultant signals control counter 4G/6G/6H, the origin of the Packet Address Bus. This bus addresses the Foreground Packet RAM and the Foreground Staging RAM. Other circuits receive signals from the Foreground Packet Control PLA. Other signals are affected by the Foreground Packet Control PLA.

>Foreground Rom Control PLA 14H
>Foreground Object ROM Resistor 6K
>Latch 5F
>Line Buffer RAM Multiplexer 4K
>Line Buffer RAM 5D/6D/7D/8D/ and related gates

Foreground ROM Control. Chip 14H is another PLA device. The system latches this PLA's output at chips 13H, 15H, and 15J. Functions output from the latches address the the Foreground Object ROM . Other signals from PLA 14H affect operation in the following circuits...

>Multiplexer 9D/9E
>NAND 13J and PD Bus Latch 5E/6E/7E/8E
>Foreground Pixel Shift Register
7G/7H/8G/8H/9H/10G/10H
>Line Buffer RAM 5D/6D/7D/8D and related gates

SIMPLIFIED BLOCK DIAGRAM

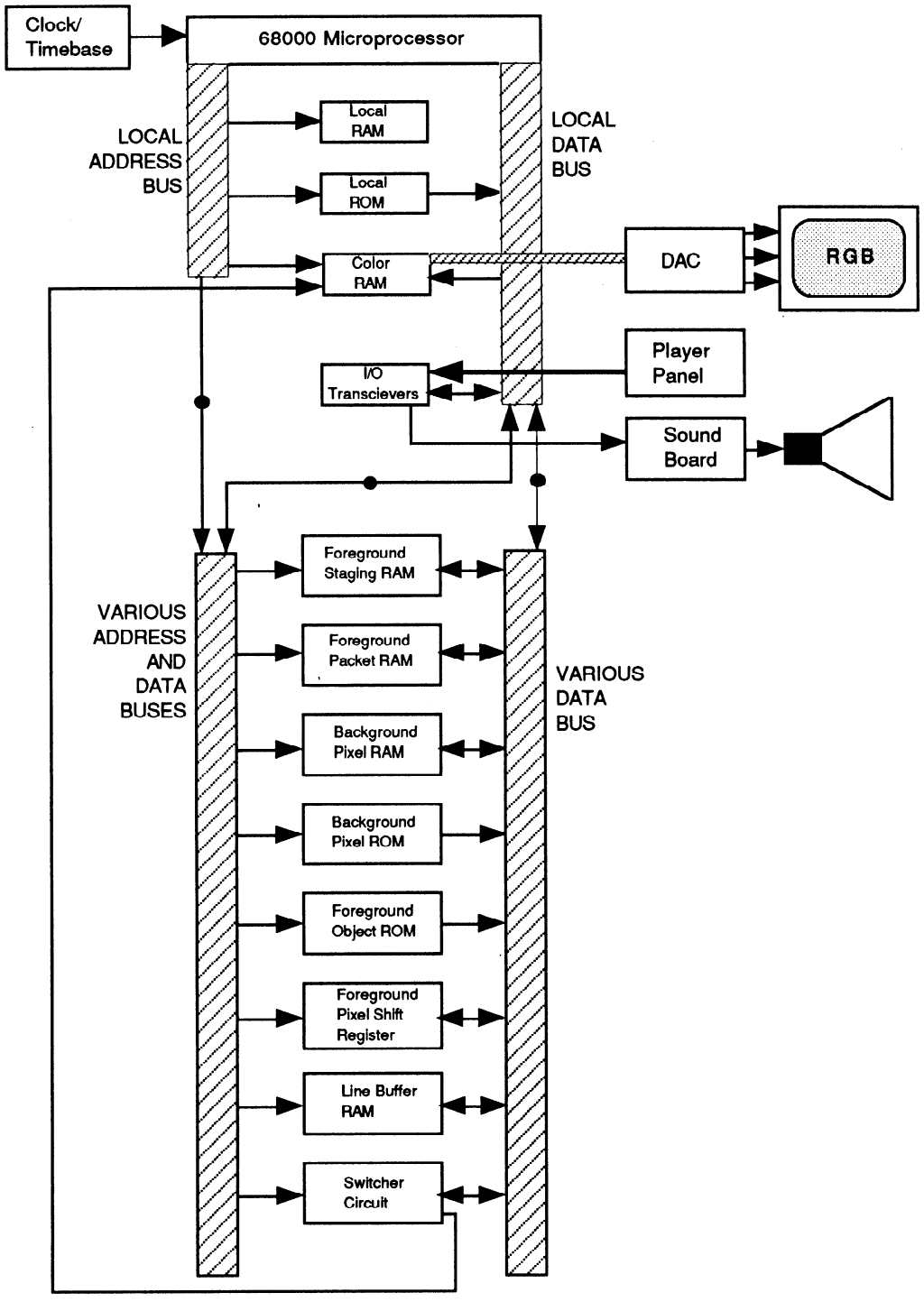

DETAILED BLOCK DIAGRAM

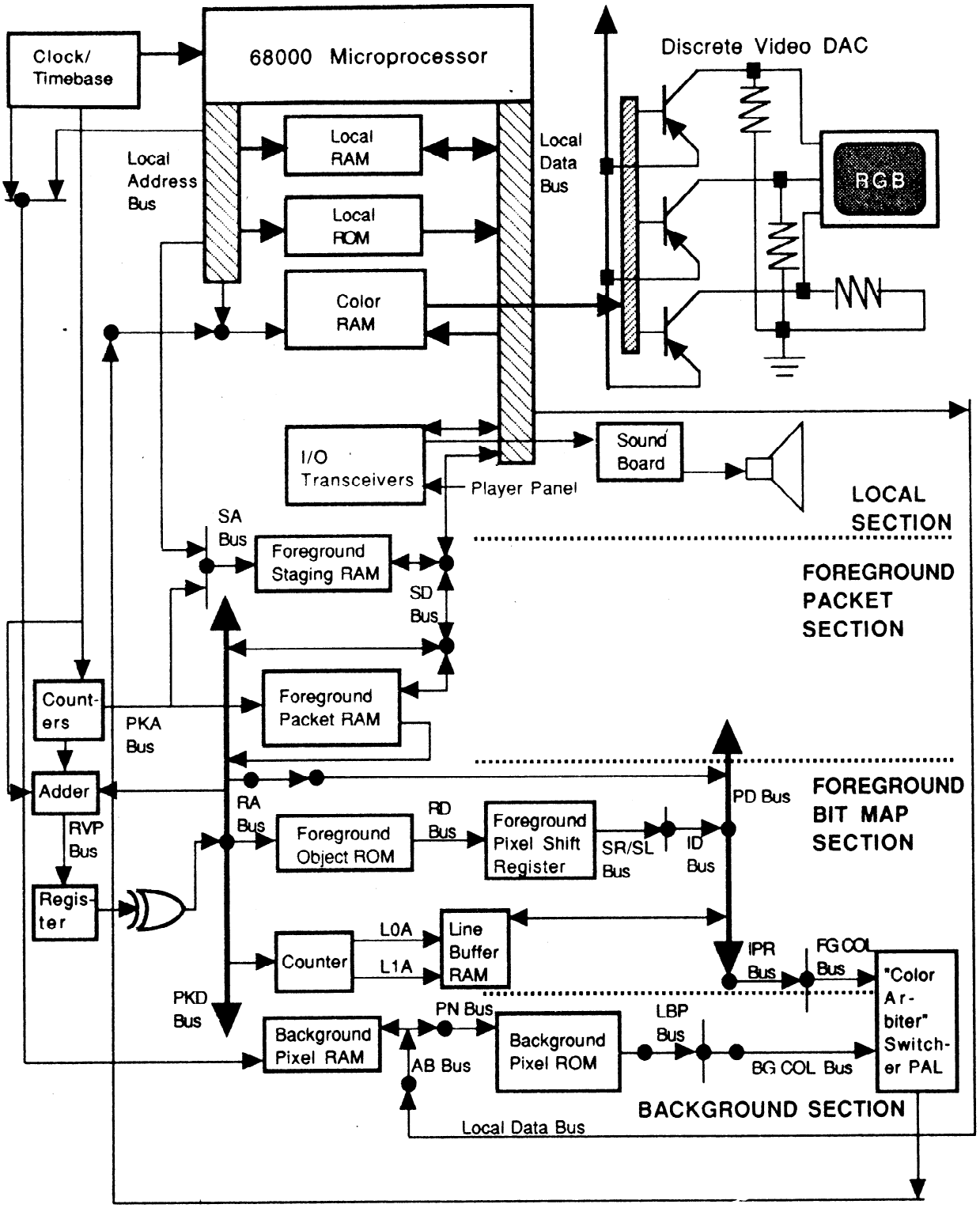

NOTES: ● =latch, buffer or transceiver.
Left side of memory chips indicates address pins; right side, data pins.
⧫ = multiplexer.
Not shown: Control Bus, part of Timebase Bus.

Troubleshooting: From Block to Problem

Symptom	Area to Check
Dead system	1. Fuses; 2. Switching Power Supply; 3. clock chip; 4. monitor; 5. local bus components: MPU 4E, Local RAM 4B/4C, Local ROM 1B/ 1C, 2B/2C, 3B/3C, etc.; 6.capacitor C1; 7. transistor Q3.
Missing or improper background video	Background Section: 1. mux 13F/13G/ 14G; 2. Background Pixel RAM 12F/13E; 3. transceiver 12F; 4. latch 11E/12E; 5. Background Pixel PROM 11D/12D; latch 11C/12C; mux 11B/12B; latch 10B; PAL 9B.
Characters in the wrong place; wrong foreground colors	Foreground Packet Section: 1. PLA 11J/12J; 2. Mux 2H/3H/4H; 3. Foreground Staging RAM 3J/4J; 4. data buffer 5H; 5. counter 4G/6G/6H; 6. Foreground Packet RAM 5G.
Missing or improper foreground video	Foreground Bit Map Section: 1. Adder 11G/12G; 2. register 6K; 3. OR 7K/13K; 4. latch 5J/6J; 5. PLA 14H; 6. Foreground Object ROM 7J/8J/9J/10J; 7. register 7G/7H/8G/8H/9G/9H/10G/10H; 8. mux 9D/9E; 9. latch 5F; 9. latch 5E/6E/7E/8E; 10. counter 6F/7F/8F/9F; 11. Line Buffer RAM 5D/6D/7D/8D; 12. latch 5C/6C/7C/8C; 13. mux 6B/7B.
Ghost images; confused foreground/background separation	1. PAL 9B; 2. mux 6B/7B; 3. latch 10B.
Black, vertical lines through image	1. Flip-flop 8B; 2. latch 7A/8A; 3. Color RAM 4A.
One missing hue	Red: Q8/Q9; green: Q4/Q5; blue: Q6/Q7.

Troubleshooting: From Block to Problem (continued)

Symptom	Area to Check
Some player panel switches don't work	1. Switches under panel; 2. Connectors 1J2, 1J3, 1J4; 3. Buffers 5A, 9A, 13A, 14A; 4. resistor packs RM2, RM3, RM4, RM5; 5. associated capacitors.
Missing sounds	1. Connectors 1J3, 1J4; 2. buffers 6A, 10A; 3. resistors R99 through R106; 4. resistors R107 to R112; 5. associated capacitors.
Characters with lines through them or boxes around them	Foreground Object ROM chips 7J, 8J, 9J, 10J.
Wrong or mixed-up character images	1. register 6K; 2. XOR gate 7K/13K; 3. latch 5J/6J; 4. Foreground Object ROM 7J/8J/9J/10J; 5. PLA 14H; 6. latch 13H; 7. PLA 11J; latch 11K.
Rough or "sketchy" looking background video	Background Pixel ROM chips 11D and 12D.
Wrong or mixed-up background images	1. Multiplexer 13F/13G/14G; 2. Background Pixel RAM 13E; 3. transceiver 12F; 4. latch 11E/12E.

JAMMA/JOYSTICK CABLE

FUNCTION	WIRE COLOR	PIN	PIN	WIRE COLOR	FUNCTION
GND	BLK	1	A	BLK	GND
GND	BLK	2	B	BLK	GND
+5V	RED	3	C	RED	+5V
+5V	RED	4	D	RED	+5V
-5V	YEL/GREEN	5	E	YEL/GREEN	-5V
+12V	ORN/BLK	6	F	ORN/BLK	+12V
KEY	----------	7	H	----------	KEY
NC	NC	8	J	NC	NC
NC	NC	9	K	NC	NC
SPEAKER -	VIO/RED	10	L	VIO/YEL	SPEAKER +
NC	NC	11	M	NC	NC
VIDEO RED	RED	12	N	GREEN	VID. GREEN
VIDEO BLUE	BROWN	13	P	WHT	VIDEO SYNC
VIDEO GND	SHIELD	14	R	NC	NC
NC	NC	15	S	NC	NC
COIN 1 LEFT	GRAY/BLUE	16	T	GRAY/YEL	COIN 2 RIGHT
PLAYER 1 START	WHT/GRAY	17	U	GRAY/RED	PLAYER 2 START
TEST SWITCH	WHT/GREEN	18	V	NC	NC
TILT	WHT/BLUE	19	W	NC	NC
NC	NC	20	X	NC	NC
NC	NC	21	Y	NC	NC
PLAYER 1 PASS	YEL/BLK	22	Z	RED/GRAY	PLAYER 2 PASS
PLAYER 1 SHOOT	BLUE/BLK	23	a	RED/WHT	PLAYER 2 SHOOT
NC	NC	24	b	NC	NC
NC	NC	25	c	NC	NC
NC	NC	26	d	NC	NC
GND	BLK	27	e	BLK	GND
GND	BLK	28	f	BLK	GND

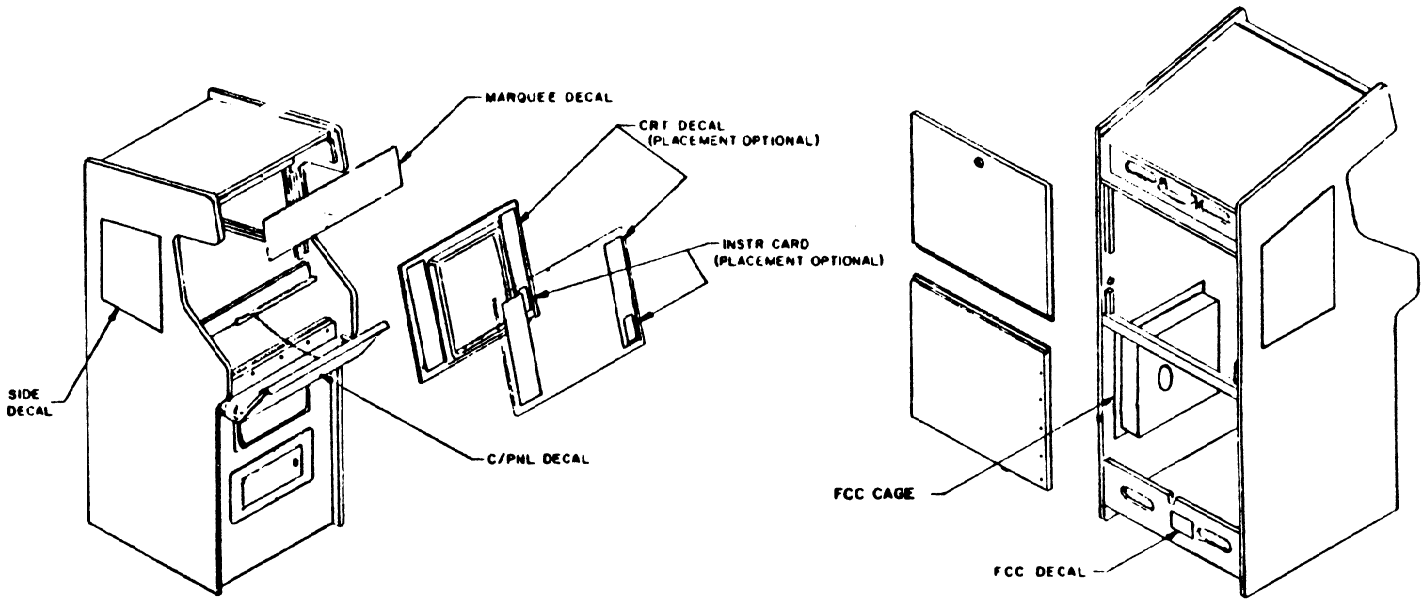

DECAL LOCATIONS

JOYSTICK WOOD SPACER DIAGRAM

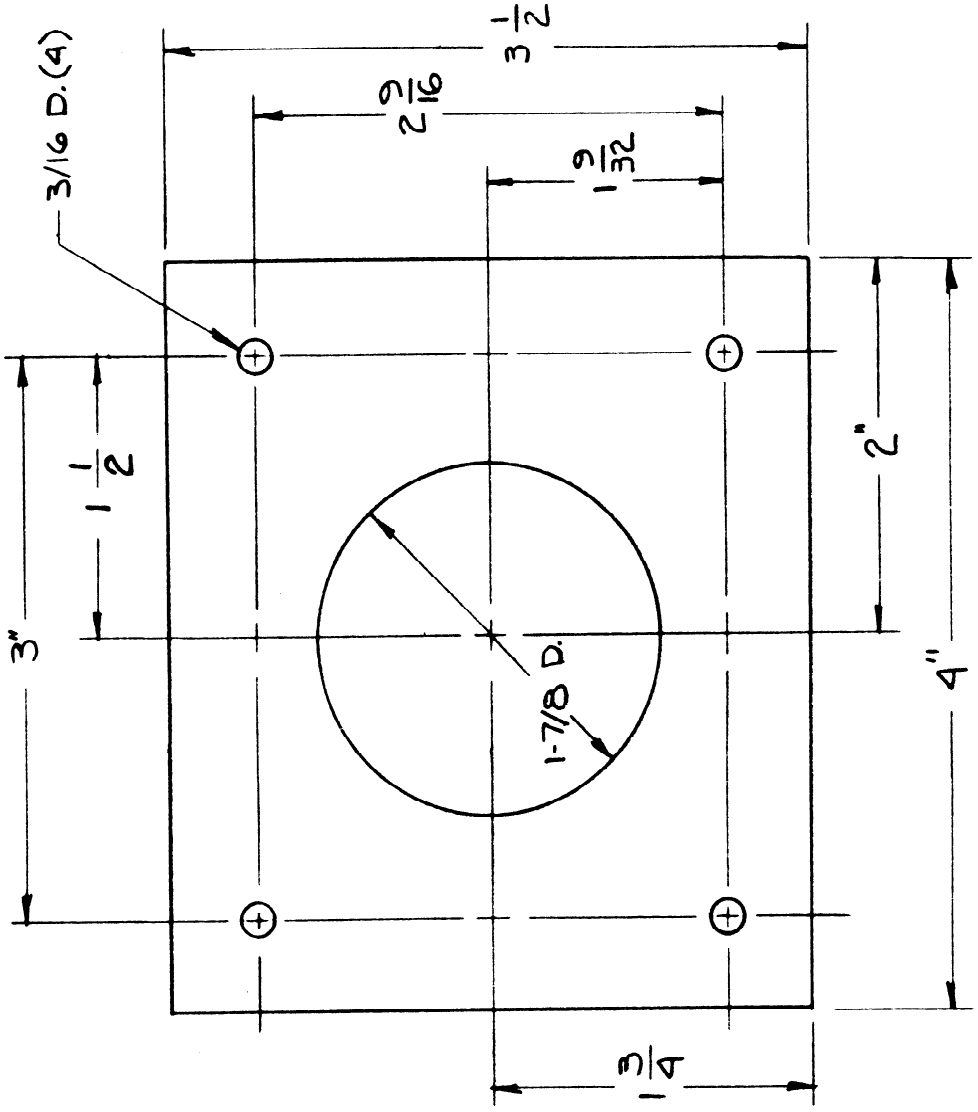

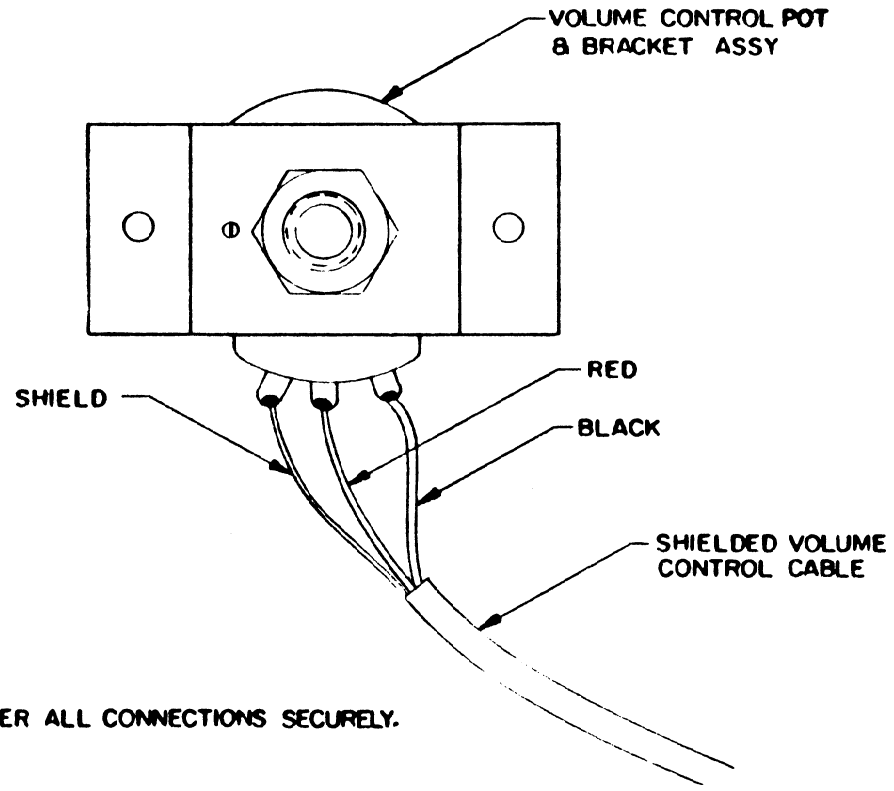

NOTE:
SOLDER ALL CONNECTIONS SECURELY.

VOLUME CONTROL WIRING

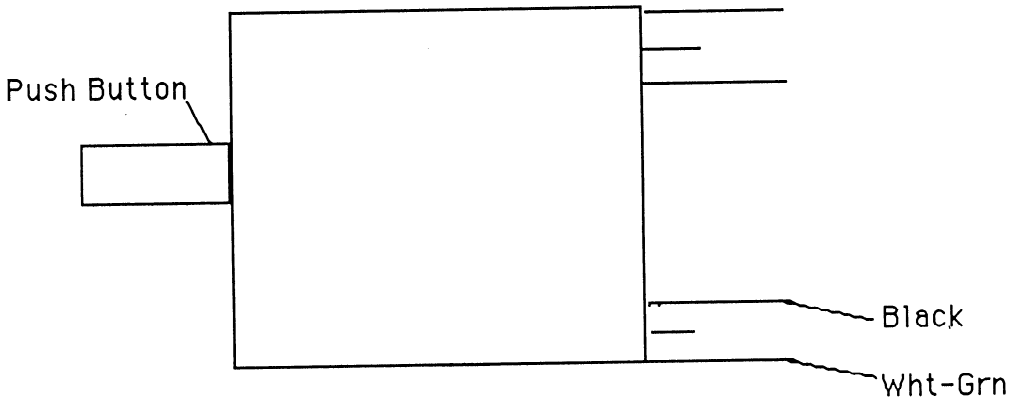

DIAGNOSTIC (TEST) SWITCH

Note: Double Sided Tape is Provided to Aid in Mounting Diagnostic (Test) Switch.

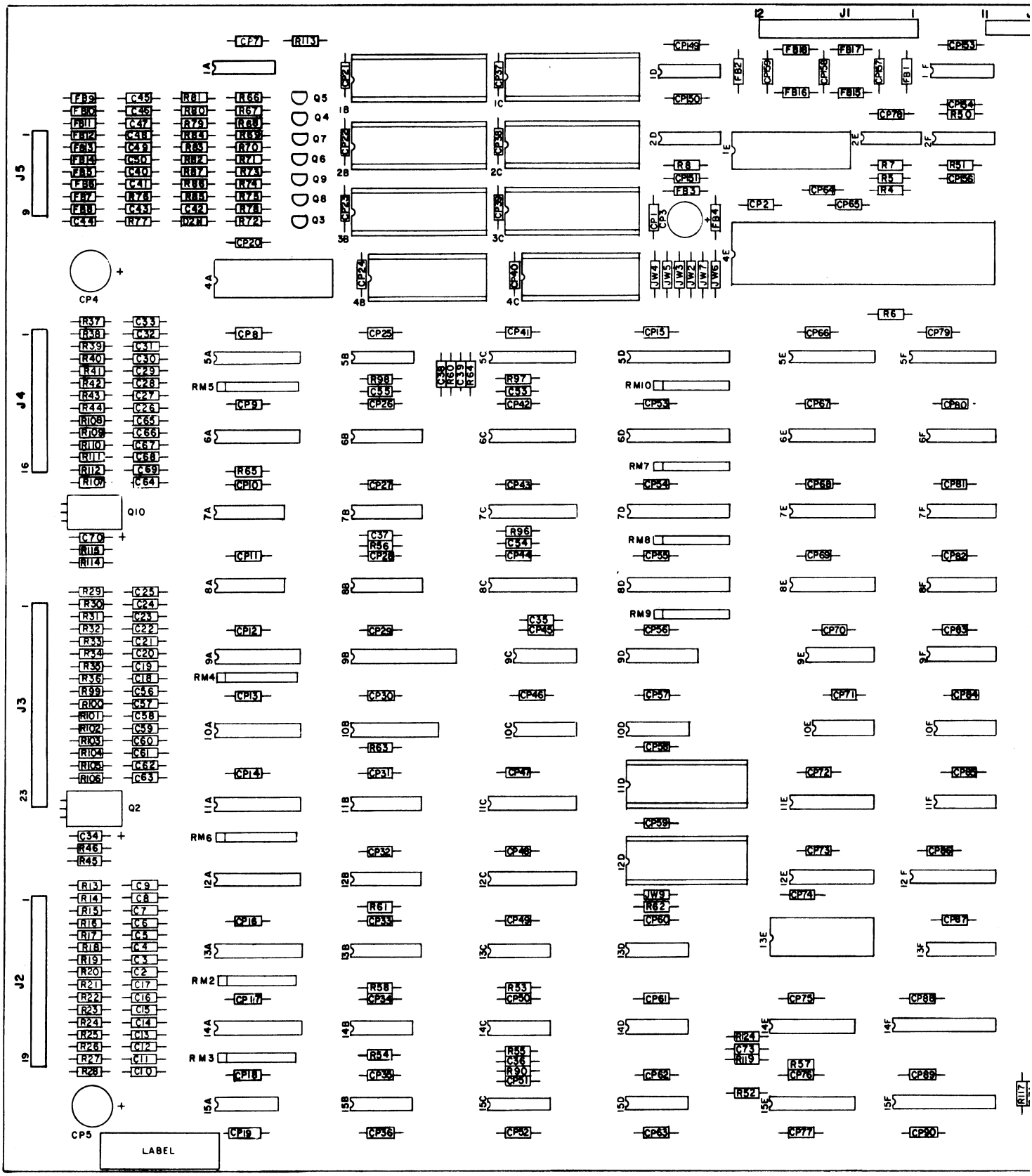

C-12610
68000 CPU ASSY

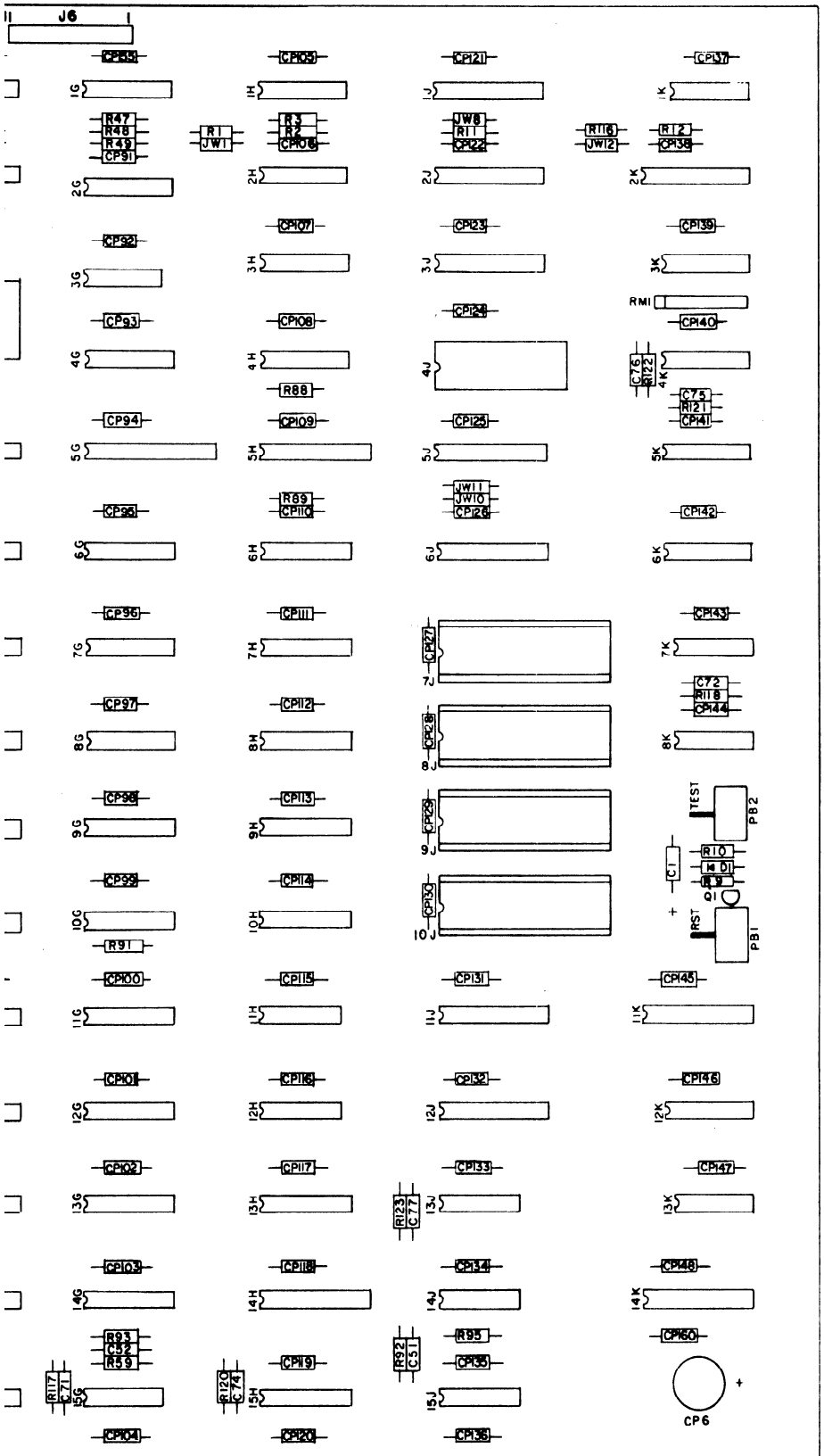
J6
CP85
CP105
CP121
CP137
1G
1H
1J
1K
R47
R48
R49
CP91
R1
JW1
R3
R2
CP106
JW8
R11
CP122
R116
JW12
R12
CP138
2G
2H
2J
2K
CP92
CP107
CP123
CP139
3G
3H
3J
3K
RMI
CP93
CP108
CP124
CP140
4G
4H
4J
4K
C76
R112
R88
C75
R121
CP141
CP94
CP109
CP125
5G
5H
5J
5K
JW11
JW10
CP126
R89
CP110
CP95
CP142
6G
6H
6J
6K
CP96
CP111
CP127
CP143
7G
7H
7J
7K
C72
R118
CP144
CP97
CP112
CP128
8G
8H
8J
8K
CP98
CP113
CP129
TEST
PB2
9G
9H
9J
C1
R10
D1
R9
Q1
CP99
CP114
CP130
RST
PB1
10G
10H
10J
R91
CP100
CP115
CP131
CP145
11G
11H
11J
11K
CP101
CP116
CP132
CP146
12G
12H
12J
12K
CP102
CP117
CP133
CP147
R123
C77
13G
13H
13J
13K
CP103
CP118
CP134
CP148
14G
14H
14J
14K
R93
C32
R59
R92
C31
R95
CP135
CP160
R117
C71
R120
C74
CP119
15G
15H
15J
CP6
CP104
CP120
CP136
+

C-12610
68000 CPU ASSY

DESCRIPTION	QTY	DESIGNATION	PART NUMBER
CAP 10pF AXIAL CER	3	C71,C55,C72	0360-00800-0038
CAP 18pF AXIAL CER	4	C37,C38,C73,C75	0365-00800-0026
CAP 33pF AXIAL CER	2	C51,C74	0986-00800-0300
CAP 47pF AXIAL CER	6	C45-C50	0986-00800-2800
CAP 68pF AXIAL CER	5	C39,C53,C54,C76,C77	0360-00800-0028
CAP 100pF AXIAL CER	32	C2-C33	0360-00800-0046
CAP 390pF AXIAL CER	4	CP1,CP2,C35,C42	0986-00800-3000
CAP 820pF AXIAL CER	18	C40,C41,C43,C44,C56-C69	0945-00816-0400
CAP .01uF AXIAL CER	155	C36,C52,CP7-151,153-160)	0986-00800-2000
CAP 10uF AXIAL TANT	3	C1,C34,C70	0986-00800-0700
CAP 470uF RAD ELEC	4	CP3-CP6	0B75-00803-0001
RES 10 OHM 1/4W 5%	6	R79,R80,R82,R83,R85,R86	100E-00005-0011
RES 22 OHM 1/4W 5%	3	R52,R57,R124	100E-00005-0016
RES 47 OHM 1/4W 5%	3	R47,R48,R49	100E-00005-0025
RES 68 OHM 1/4W 5%	3	R50,R53,R90	100E-00005-0029
RES 82 OHM 1/4W 5%	6	R60,R96,R97,R120,R121,R123	100E-00005-0031
RES 100 OHM 1/4W 5%	15	R92,R99-R112	100E-00005-0033
RES 200 OHM 1/4W 5%	7	R56,R64,R98,R117-R119,R122	100E-00005-0040
RES 470 OHM 1/4W 5%	3	R81,R84,R87	100E-00005-0051
RES 510 OHM 1/4W 5%	3	R68,R71,R75	100E-00005-0053
RES 560 OHM 1/4W 5%	3	R76,R77,R78	100E-00005-0054
RES 680 OHM 1/4W 5%	1	R58	100E-00005-0056
RES 1K OHM 1/4W 5%	10	R1,R3-R6,R12,R67,R70,R72,R74	100E-00005-0061
RES 2K OHM 1/4W 5%	3	R66,R69,R73	100E-00005-0068
RES 2.7K OHM 1/4W 5%	4	R45,R46,R114,R115	100E-00005-0071
RES 4.7K OHM 1/4W 5%	19	R2,R8,R11,R51,R54,R55,R59, R61,R62,R63,R65,R88,R89	100E-00005-0079
RES 10K OHM 1/4W 5%	34	R9,R10,R13-R44	100E-00005-0088
RES 20K OHM 1/4W 5%	1	R7	100E-00005-0095
SIP 1K 9 PIN	4	RM7,RM8,RM9,RM10	102E-00004-0011
SIP 4.7K 9 PIN	1	RM1	102E-00004-0024
SIP 4.7K 10 PIN	1	RM6	102E-00004-0026
SIP 100K 10 PIN	4	RM2,RM3,RM4,RM5	102E-00004-0045
DIODE 1N4148	2	D1,D2	103E-00002-0005
XSTR 2N4123 NPN	2	Q1,Q3	104E-00001-0007
XSTR MPSA70 PNP	6	Q4,Q5,Q6,Q7,Q8,Q9	104E-00002-0012
XSTR TIP110 NPN	2	Q2,Q10	104E-00009-0001
COSC 16MHz	1	1D	109E-00002-0001
COSC 20MHz	1	1F	0304-00804-0007
IC 7406	1	1A	0986-00803-7600
IC 74ALS20	1	12H	0A59-00803-0015
IC 74F00	2	11F,8K	0A59-00803-0001
IC 74F04	1	3G	0A59-00803-0034
IC 74F08	1	10D	0A59-00803-0030
IC 74F32	1	1K	0304-00803-0059
IC 74F74	2	2F,11H	0A59-00803-0003
IC 74F86	2	13C,13K	0A59-00803-0031
IC 74F157	4	14G,13F,13G,5K	0A59-00803-0004
IC 74F174	1	12K	0A59-00803-0005
IC 74HCT244	4	14A,9A,5A,13A	0B75-00803-0001
IC 74S04	2	15B,15C	0986-00803-6600
IC 74S74	1	2D	0A15-00803-0023
IC 74LS00	1	5B	0304-00803-0010
IC 74LS02	1	9C	0986-00803-7400
IC 74LS05	1	2E	0A15-00803-0011
IC 74LS08	1	15D	0986-00803-7300
IC 74LS20	3	13D,10E,15A	0986-00803-1004
IC 74LS32	2	14D,13J	0986-00803-6100
IC 74LS74	5	15G,14J,10F,14B,14C	0986-00803-1005
IC 74LS86	2	10C,7K	0986-00803-9900
IC 74LS148	1	3K	0A15-00803-0067
IC 74LS153	2	11B,12B	0A59-00803-0006
IC 74LS157	6	8A,7A,4K,4H,3H,2H	0304-00803-0021
IC 74LS161	2	1H,2G	0986-00803-1003

DESCRIPTION	QTY	DESIGNATION	PART NUMBER
IC 74LS163	3	4G,6G,6H	0A59-00803-0008
IC 74LS169	4	9F,8F,6F,7F	0304-00803-0023
IC 74LS173	1	6K	0A59-00803-0009
IC 74LS174	4	13B,8B,15H,13H	0304-00803-0024
IC 74LS175	1	15J	0304-00803-0025
IC 74LS194	8	8G,9H,7H,10G,9G,7G,8H,10H	0304-00803-0026
IC 74LS244	2	5H,11A	0986-00803-4800
IC 74LS245	2	12F,3J	0986-00803-6400
IC 74LS258	2	9E,9D	0304-00803-0028
IC 74LS273	6	10B,12C,11C,11K,10A,6A	0986-00803-4700
IC 74LS283	2	11G,12G	0304-00803-0030
IC 74LS298	2	7B,6B	0A59-00803-0010
IC 74LS368	1	1G	0A59-00803-0011
IC 74LS374	8	5E,6E,7E,8E,6C,7C,8C,5C	0986-00803-4600
IC 74LS377	5	12E,11E,5J,6J,5F	0A59-00803-0012
PACOUT REV 4 PLA	1	11J	A59A-26AXL-AXHD
PACNS REV 4 PLA	1	12J	A59A-26AXL-BXHD
ROMCTRL REV 1 PLA	1	14H	A59A-26AXL-CXHD
MMC02B HAL	1	14F	0986-00803-9000
MMC01A HAL	1	15F	0986-00803-8900
MMC06 HAL	1	14E	0986-00803-9200
MMC03B HAL	1	15E	0986-00803-9100
COLARB PAL20L8	1	9B	0E61-00803-0001
IODCD PAL16LB	1	1J	0B75-00803-0003
MEMDCD PAL16L8	1	2J	0B75-00803-0004
DTACK PAL16R4	1	2K	0B75-00803-0005
HSYNC PAL16R4	1	14K	0B75-00803-0006
RAM 93419 64X9	1	4A	0986-00803-9600
RAM 2018 2KX8 45nS	4	8D,7D,5D,6D	0A59-00803-0028
RAM 2018 2KX8 55nS	1	5G	0A59-00803-0029
RAM 6116 2KX8 150nS	1	4J	0A59-00803-0027
RAM 6116 2KX8 120nS	1	13E	0A59-00803-0014
RAM STATIC 8KX8 150nS	1	4C	5340-12278-00
RAM NON-VOL 8KX8 250nS	1	4B	5347-12394-00
MC68000	1	4E	0304-00803-0051
MC6840	1	1E	0A15-00803-0068
SOCKET IC 16 PIN (.3)	2	1G,14K	110E-00001-0003
SOCKET IC 20 PIN (.3)	9	1J,2J,2K,14K,14E,15E,11J	110E-00001-0005
SOCKET IC 24 PIN (.3)	8	14F,15F,5G,5D,6D,7D,8D,9B	110E-00001-0009
SOCKET IC 24 PIN (.6)	2	13E,4J	110E-00001-0007
SOCKET IC 28 PIN (.6)	12	1B-4B,1C-4C,11D,12D,1E,4A	110E-00001-0010
SOCKET IC 32 PIN (.6)	4	7J-10J	110E-00001-0024
SOCKET IC 64 PIN (.9)	1	4E	110E-00001-0016
AUTO INSERT PIN .025	73	J2,J3,J4,J5,J6	0304-00804-0009
AUTO INSERT PIN .045	11	J1	0304-00804-0010
FERRITE BEADS	18	FB1-FB18	0316-00804-0002
JUMPERS	12	JW1-JW12	117E-00001-0003
SWITCH PC MTG	2	PB1,PB2	0986-00804-3100
DIP SWITCH	1	12A	113E-00001-0004
SNAP	2	Q2,Q10	0017-00007-0134
PC BOARD	1		A080-91871-E000
LABEL-PCB ASSY ID	1		16-8850-240
GAME ROM	1	2B	A-5343-4001-4
GAME ROM	1	3B	A-5343-4001-5
GAME ROM	1	2C	A-5343-4001-6
GAME ROM	1	3C	A-5343-4001-7
GAME ROM	1	11D	A-5343-4001-8
GAME ROM	1	12D	A-5343-4001-9
GAME ROM	1	7J	A-5343-4001-10
GAME ROM	1	8J	A-5343-4001-11
GAME ROM	1	9J	A-5343-4001-12
GAME ROM	1	10J	A-5343-4001-13

REV	DESCRIPTION OF CHANGE	ECN NO DATE
—	NPR 5-22-89	21301

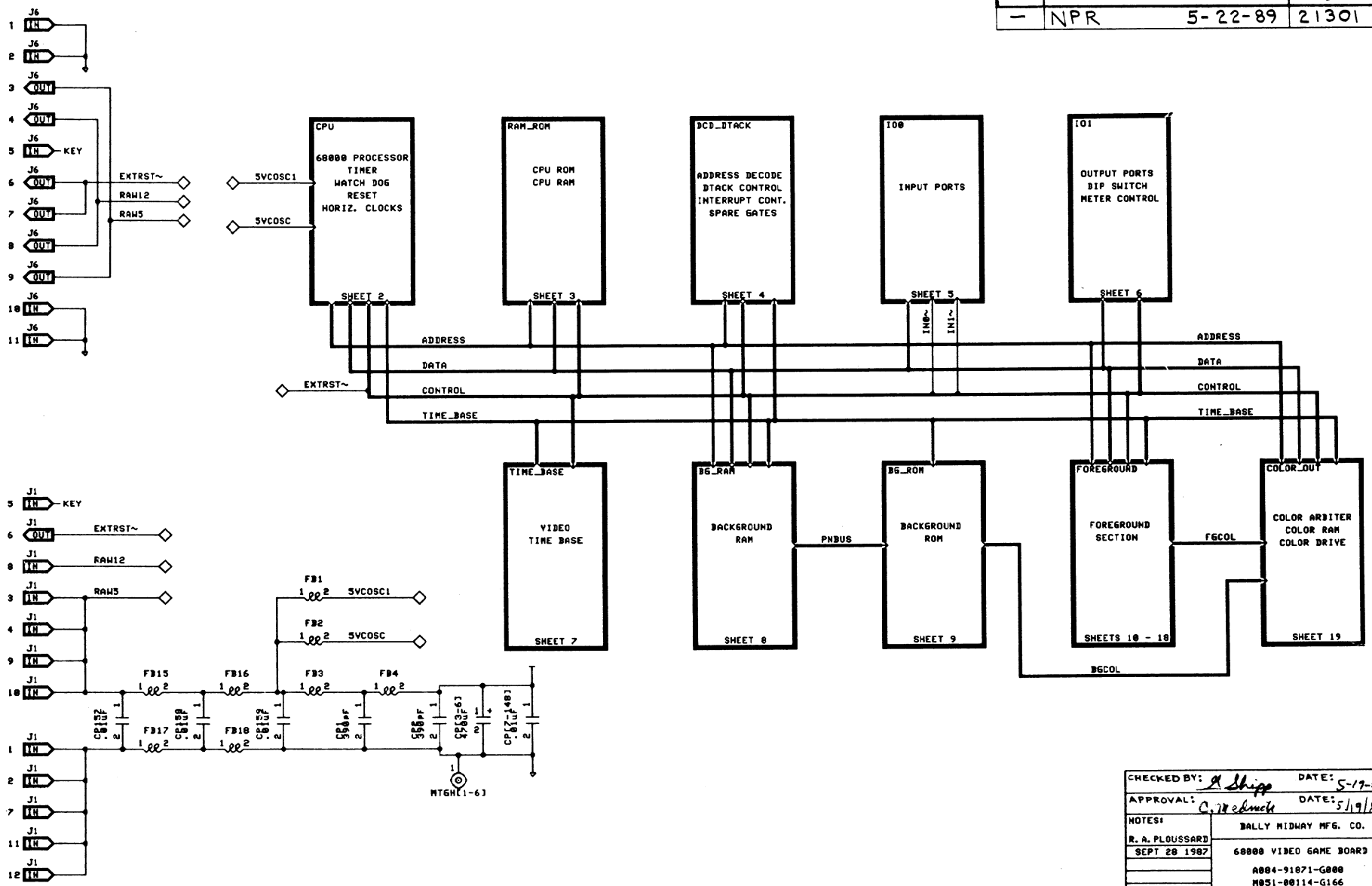

LAST USED: R124,C77,JW12,Q10,D2,RM10,FB18,CP160
NOT USED: CP152

CHECKED BY: A Shipp	DATE: 5-19-89
APPROVAL: C. Medrick	DATE: 5/19/89
NOTES: R. A. PLOUSSARD SEPT 28 1987	BALLY MIDWAY MFG. CO. 68000 VIDEO GAME BOARD A004-91871-G000 M051-00114-G166
	SHEET 1 OF 19 REV

1	NPR	5-22-89	21301

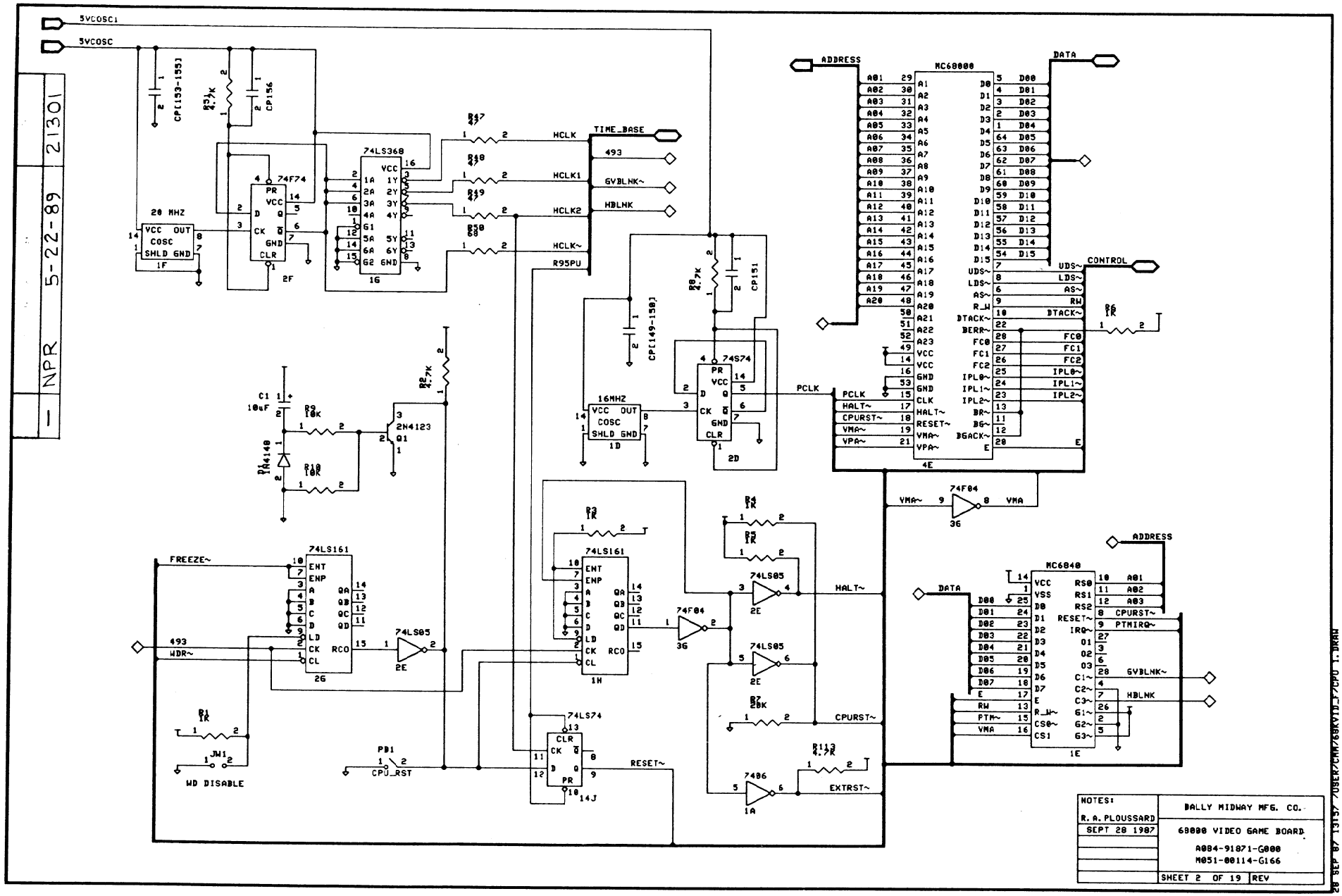

REV	DESCRIPTION OF CHANGE	
—	NPR 5-22-89	21301

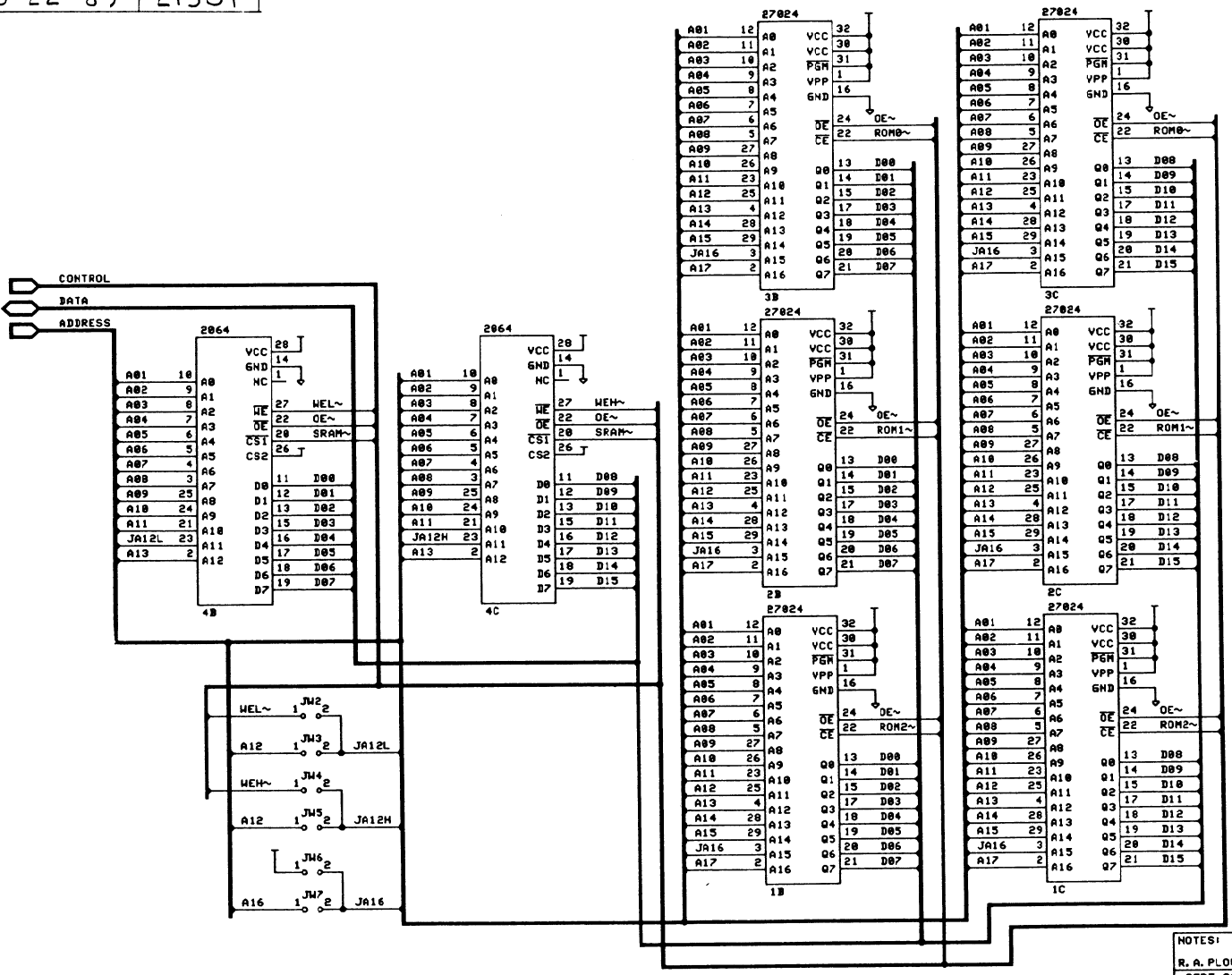

NOTES:	BALLY MIDWAY MFG. CO.
R. A. PLOUSSARD	68000 VIDEO GAME BOARD
SEPT 28 1987	A084-91871-G000
	M051-00114-G166
	SHEET 3 OF 19 REV

28 SEP 87 14:15 /USER/CMM/68KVID_F/RAM_ROM 1.DRAW

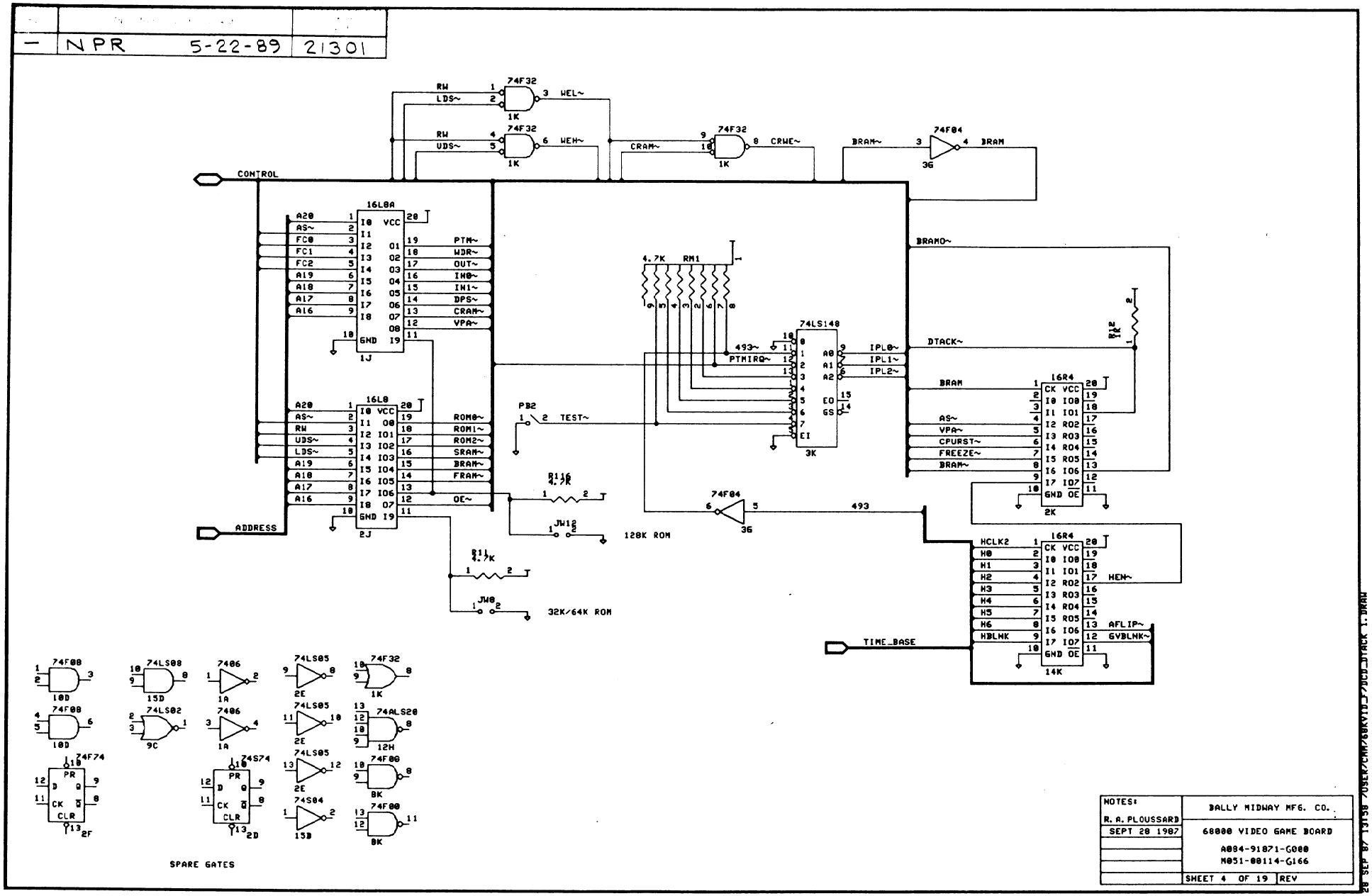

NPR 5-22-89 21301
CONTROL
ADDRESS
TIME_BASE
16L8A
1J
16L8
2J
74F32
1K
74F04
3G
74LS148
3K
16R4
2K
14K
4.7K RM1
PB2
TEST~
R116 4.7K
JW12
128K ROM
R11 4.7K
JW8
32K/64K ROM
493
BRAM~
BRAM
BRAMO~
DTACK~
CRAM~
CRWE~
WEL~
WEH~
RW
LDS~
UDS~
PTM~
WDR~
OUT~
IN0~
IN1~
DPS~
CRAM~
VPA~
ROM0~
ROM1~
ROM2~
SRAM~
BRAM~
FRAM~
OE~
IPL0~
IPL1~
IPL2~
AS~
VPA~
CPURST~
FREEZE~
BRAM~
HCLK2
HEN~
AFLIP~
GVBLNK~
HBLNK
74F08
10D
74LS08
15D
74LS02
9C
7406
1A
74LS05
2E
74ALS20
12H
74F74
2F
74S74
2D
74S04
15B
74F00
8K
SPARE GATES
NOTES:
R. A. PLOUSSARD
SEPT 28 1987
BALLY MIDWAY MFG. CO.
68000 VIDEO GAME BOARD
A084-91871-G000
M051-00114-G166
SHEET 4 OF 19
REV
28 SEP 87 13:58 /USER/CMM/68KVID_7/DCD_DTACK 1.DRAW

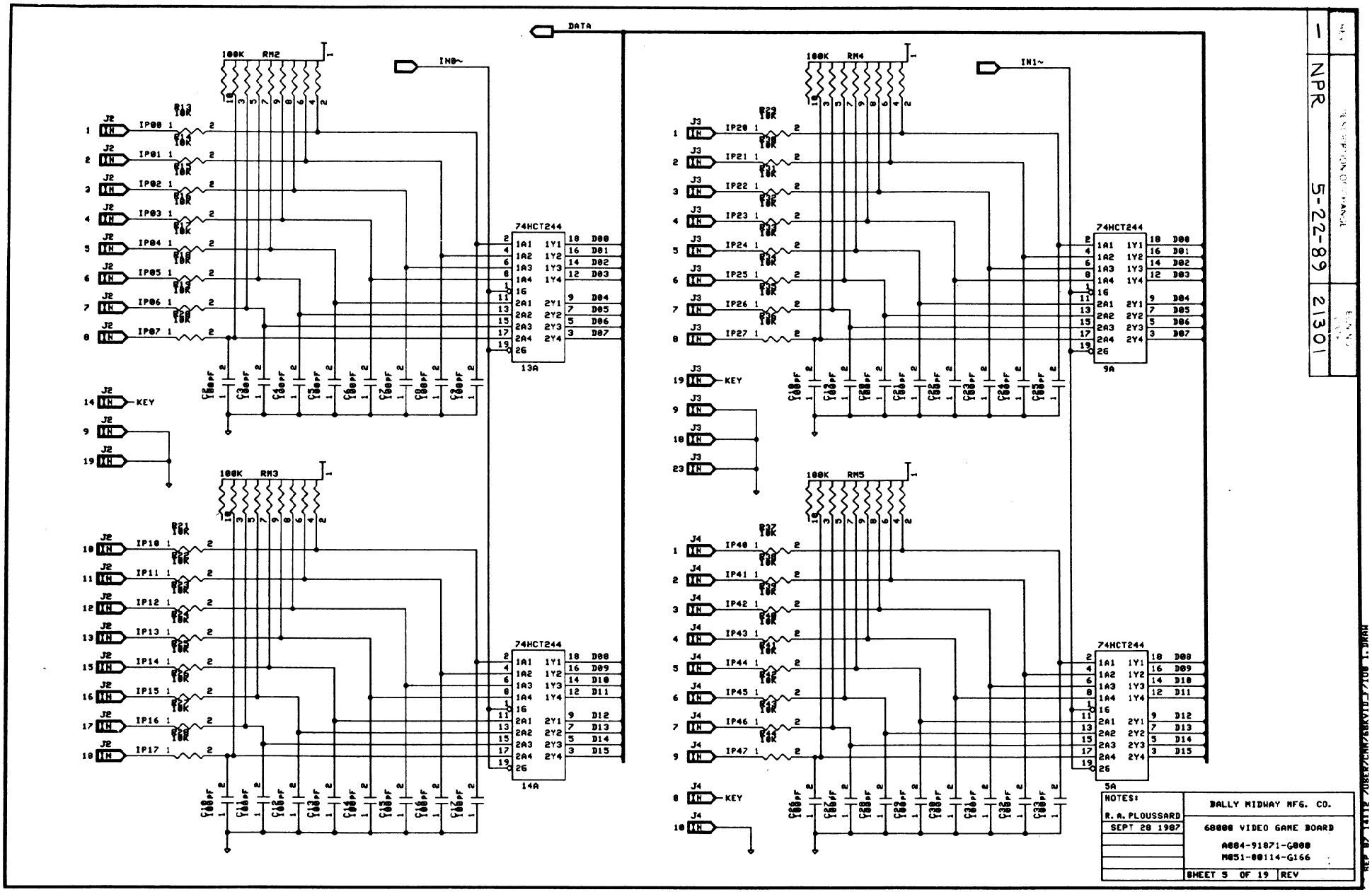

NOTES: R. A. PLOUSSARD SEPT 28 1987	BALLY MIDWAY MFG. CO.	
	68000 VIDEO GAME BOARD	
	A804-91871-G000	
	M851-00114-G166	
	SHEET 5 OF 19	REV

-	NPR	
	5-22-89	
	21301	

REV	DESCRIPTION OF CHANGE	ECO #
—	NPR 5-22-89	21301

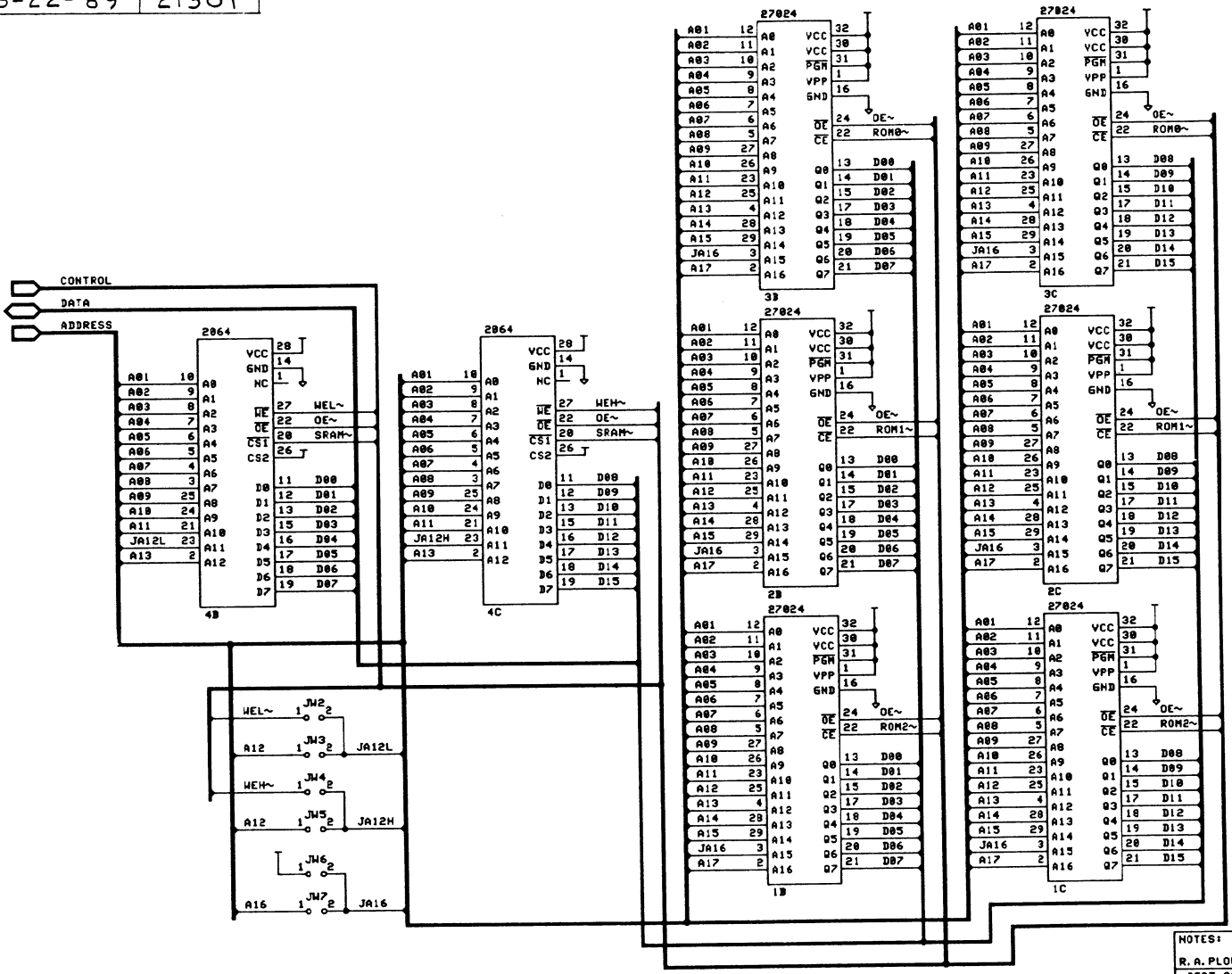

NOTES:	BALLY MIDWAY MFG. CO.
R. A. PLOUSSARD	68000 VIDEO GAME BOARD
SEPT 28 1987	A884-91871-G000
	A851-00114-G166
	SHEET 3 OF 19 REV

28 SEP 87 14:15 /USER/DAN/68KV1D_2/RAM_ROM_1.DRAW