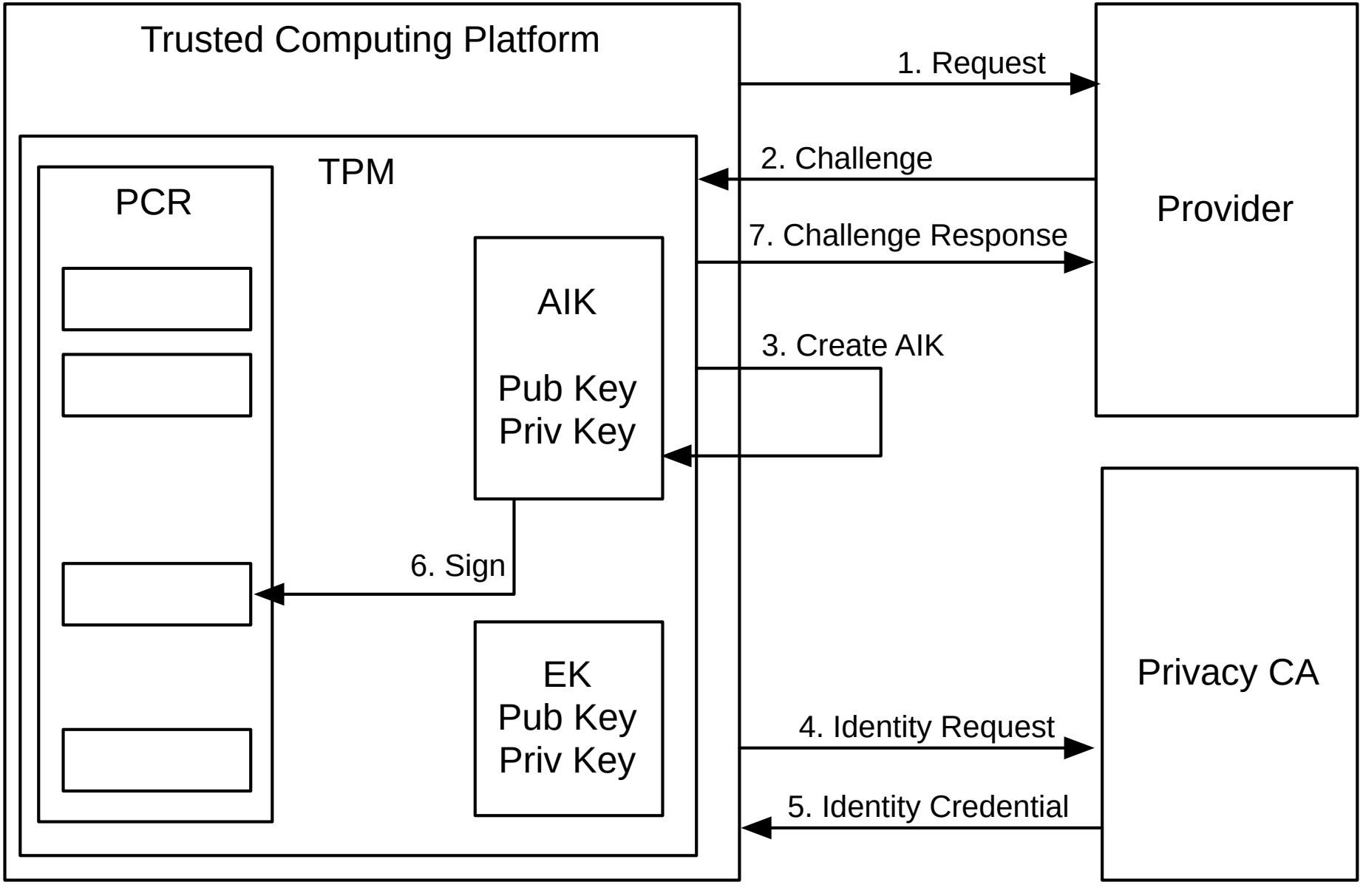
Trusted Computing Platform
TPM
PCR
AIK
Pub Key
Priv Key
EK
Pub Key
Priv Key
1. Request
2. Challenge
7. Challenge Response
3. Create AIK
6. Sign
4. Identity Request
5. Identity Credential
Provider
Privacy CA