CONTENTS

THE HEAD OF NETWORK COMPONENTS
Fabrizio Gasbarri

1 DOCUMENT AIMS AND APPLICATION AREA

This Global Standard applies to 12/20(24) kV and 18/30(36) kV indoor and outdoor cold shrink terminations for Medium Voltage cables with extruded insulation, both full and reduced insulating thickness, with copper wires or aluminum tape screen.

These Global Standard applies to the Distribution Companies of Enel Group listed below:

Country	Distribution Company
Argentina	Edesur
Brazil	Enel Distribuição Rio (RJ) Enel Distribuição Ceará (CE) Enel Distribuição Goiás (GO) Enel Distribuição São Paulo (SP)
Chile	Enel Distribución Chile
Colombia	Codensa
Iberia	e-distribución
Italy	e-distribuzione
Perú	Enel Distribución Perú
Romania	e-distributie Banat e-distributie Dobrogea e-distributie Muntenia

Distribution Companies

1.1 RELATED DOCUMENTS TO BE IMPLEMENTED AT COUNTRY LEVEL

This document applies to both Enel Global Infrastructure and Networks Srl Company and to Infrastructure and Networks Business Line perimeter, when each Company does not have to issue further documents.

2 DOCUMENT VERSION MANAGEMENT

Version	Date	Main changes description
00	25/11/2015	First emission.
01	23/02/2018	Material codes updated. Chapter on barcode updated, Painted or coated semiconducting layer not allowed; New tests: expiration test, UV test for outdoor accessories; Modification of requirements for resistance to fire; pin lugs eliminated, Modification of requirements of screen connecting plate; modification of requirements of tracking and erosion test. Class 24 kV for Italy and Rumania. Rated short time withstand current in the screen; Increase of the minimum section of the earthing lug for Italy, Rumania, Spain and Peru from 16 to 25 mm2.
02	25/05/2018	Revised tables 4, 5, 6, 7, 8, 9, 10 and 11. Expiration tests description. Paragraph on robustness test eliminated.
03	09/07/2018	Note on table 11. Revised material codes for Brazil.
Addendum Ed 0.	25/12/2019	Material codes updated for Chile.
Addendum Ed 1.	28/12/2020	Enel Distribuição São Paulo is included; table 2,Rated short time withstand current in the screen (kA) is updated for Colombia; table 7 updated for Argentina; Material codes updated; The range of sections available for 18/30(36) kV joints is updated; special consideration for São Paulo in type tests; special indoor termination for Peru in local section.
04	12/05/2021	Terminals compatible with 25 mm2 cross-section cables are included for pre-assembled cables links solutions; Rated short time withstand current in the screen (kA) is updated for smaller cross-section cable; Material codes and type codes updated; list of component table is reorganized; Earthing lug section is reported directly in the list of component table; Modification of requirements of screen connecting plate (grater), for smaller and larger cross-sections cables, with aluminum tape screen; type test according to HD-629 S3 and extension of compliance for family and Lugs; Acceptance Test chapter modifications; Chapter on barcode updated; paragraph on technical conformity assessment (TCA) is added, recognition of homologation for previous revision of the standard.

3 UNITS IN CHARGE OF THE DOCUMENT

Responsible for drawing up the document:

- Global Infrastructure and Networks: Engineering and Construction / Components and Devices Design unit / Network Components unit

Responsible for authorizing the document:

- Global Infrastructure and Networks: Head of Network Components unit
- Global Infrastructure and Networks: Head of Health, Safety, Environment and Quality unit.

4 REFERENCES

- Code of Ethics of Enel Group;
- Enel Human Right Policy;
- The Enel Group Zero Tolerance of Corruption (ZTC) Plan;
- Organization and management model as per Legislative Decree No. 231/2001;
- RACI Handbook Infrastructure and Networks no. 06;
- Enel Global Compliance Program (EGCP);
- Integrated Policy of Quality, Health and Safety, Environment and anti-Bribery.
- ISO 9001:2015 - Quality Management System - Requirements;
- ISO 14001:2015 - Environmental Management System - Requirements and user guide;
- ISO 45001:2018 - Occupational Health and Safety Management System - Requirements and user guide;
- ISO 50001:2018 - Energy management systems - Requirements with guidance for use;
- ISO 37001:2016 - Anti-bribery Management System - Requirements with guidance for use.
- MAT-O&M-NCS-2021-0033-EGIN version 3 “Global Infrastructure and Networks – GSCG002 Technical Conformity Assessment”.
- CNS-O&M-S&L-2021-0032-EGIN “Global Infrastructure and Networks Barcode specification.

International technical references related with the material:

Reference documents listed below (amendments included) shall be the edition in-force at the contract date.

ISO/IEC 17000	Conformity assessment – Vocabulary and general principles
ISO/IEC 17020	General criteria for the operation of various types of bodies performing inspection
ISO/IEC 17025	General requirements for the competence of testing and calibration laboratories
ISO/IEC 17050-1	Conformity assessment - Supplier’s declaration of conformity - Part 1: General requirements (ISO/IEC 17050-1:2004, corrected version 2007-06-15)
ISO/IEC 17050-2	Conformity assessment - Supplier’s declaration of conformity - Part 2: Supporting documentation (ISO/IEC 17050-2:2004)
ISO/IEC 17065	Conformity assessment – Requirements for bodies certifying products, processes and services

HD 629.1 S3	Test requirements for accessories for use on power cables of rated voltage from 3,6/6(7,2) kV up to 20,8/36(42) kV Part 1: Accessories for cables with extruded insulation
IEC 61238-1	Compression and mechanical connectors for power cables - Part 1: Test methods and requirements
IEC 60587	Electrical insulating materials used under severe ambient conditions - Test methods for evaluating resistance to tracking and erosion
IEC 62217	Polymeric HV insulators for indoor and outdoor use - General definitions, test methods and acceptance criteria
IEC 60695-11-10	Fire hazard testing - Part 11-10: Test flames - 50 W horizontal and vertical flame test methods
IEC 60721-2-1	Classification of environmental conditions - Part 2-1: Environmental conditions appearing in nature - Temperature and humidity.
ISO IEC 17067	Conformity assessment — Fundamentals of product certification and guidelines for product certification schemes.

Enel Global Standards

- GSC001[1] “Underground Medium Voltage Cables”.
- GSCC015 “Cable preparation for MV Cables”
- GSCC008 “Medium Voltage Aerial Bundled Cables”

Local Standard

Italy

[1] The characteristics of the cables are included in the Enel Group Global Standard. Besides installation on new cables, which comply to GSC001, the termination may be installed on the existing network, which is made of cables compliant to older local standards. Nevertheless, this Global Standard also takes into account the main characteristics of existing cables for each Country (rated voltage, section and min/max diameter over insulation).

- Nota Operativa PVR001 – Rev. 2 – Ott. 2012 - Gestione Garanzie dei materiali di ENEL Distribuzione.

Brazil

- NBR14643, Corrosão atmosférica – Classificação da corrosividade de atmosferas
- Nr-10, Segurança em Instalações e Serviços em Eletricidade

Colombia

- RETIE – Reglamento Técnico de Instalaciones Eléctricas.

Chile

- NSEC 5 Reglamento de Instalaciones Eléctricas de Corrientes Fuertes

Iberia

- R.D. 614/2001, de 8 de junio, sobre disposiciones mínimas para la protección de la salud y seguridad de los trabajadores frente al riesgo eléctrico.
- R.D. 337/2014, de 9 de mayo, por el que se aprueban el Reglamento sobre condiciones técnicas y garantías de seguridad en instalaciones eléctricas de alta tensión y sus Instrucciones Técnicas Complementarias ITC-RAT 01 a 23.
- R. D, 223/2008de 15 de febrero, por el que aprueba el Reglamento sobre condiciones técnicas y garantías de seguridad en líneas eléctricas de alta tensión y sus instrucciones técnicas complementarias ITC-LAT 01 a 09 (R.L.A.T.).

Romania

- Legea securităţii şi sănătăţii în muncă nr.319/2006, cu modificările şi completările ulterioare.
- Ordonanţa de Urgenţă nr. 195/22.12.2005 privind protecţia mediului, cu toate modificările şi completările în vigoare.
- Legea nr. 211/25.11.2011 privind regimul deşeurilor.
- H.G. 1037/03.11.2010 privind deşeurile de echipamente electrice şi electronice.

Europa

- Directive 2006/95/EC of the European Parliament and of the Council of 12 December 2006.
- Directive 2004/108/EC electromagnetic compatibility.

5 ORGANIZATIONAL PROCESS POSITION IN THE PROCESS TAXONOMY

Value Chain/Process Area: Networks Management

Macro Process: Materials management

6 DEFINITIONS AND ACRONYMS

Acronym and Key words	Description
Medium Voltage (MV)	Any set of nominal voltage levels exceeding 1 kV and below a value between 30 kV and 100 kV. NOTE: The boundary value between medium voltage and high voltage depends on local and historical circumstances or on common usage. Nevertheless the band 30 kV to 100 kV normally contains the accepted boundary.
Technical Conformity Assessment (TCA)	A “conformity assessment” with respect to “specified requirements” consists in functional, dimensional, constructional and test characteristics required for a product (or a series of products) and quoted in technical specifications and quality requirements issued by Enel Group distribution companies. This also includes the verification of conformity with respect to local applicable regulation and laws and possession of relevant requested certifications.
Type A documentation	Not confidential documents used for product manufacturing and management from which it is possible to verify the product conformity to all technical specification requirements, directly or indirectly.

Additional terms and definitions are available in Cenelec HD 629.1 S3 and HD 629.2 S2 (See Chapter 4).

7 DESCRIPTION

7.1 List of Components

Type code	Distribution Company and Country	Country Code	Terminal Type	Cable section (mm2)	Minimum creepage distance (mm)	Maximum length[a] L (mm)	Palm Hole[b] (mm)	Earthing lug section (mm2)	Rated short time withstand current in the screen (kA)	Min/max Diameter over insulation (mm)	Rated voltage Uo/U (Um) (kV)
GSCC005/11	ED-ITALY	273045	INDOOR	25	420	350	13	16	3kA@1 seg	17/22	12/20(24)kV
GSCC005/11	ED-ROMANIA	273045	INDOOR	25	420	350	13	16	3kA@1 seg	17/22	12/20(24)kV
GSCC005/11	ED-ARGENTINA	0113-0239	INDOOR	25	420	350	13	--	3kA@1 seg	17/22	12/20(24)kV
GSCC005/11	ED-BRAZIL	270309	INDOOR	25	420	350	13	16	3kA@1 seg	17/22	12/20(24)kV
GSCC005/12	ED-ARGENTINA	0113-0224	INDOOR	35÷95	420	350	13	--	3kA@1 seg	14.9/25	12/20(24)kV
GSCC005/12	ED-BRAZIL	990277	INDOOR	35÷95	420	350	13	25	3kA@1 seg	14.9/25	12/20(24)kV
GSCC005/12	ED-CHILE	272508	INDOOR	35÷95	420	350	13	25	3kA@1 seg	14.9/25	12/20(24)kV
GSCC005/12	ED-COLOMBIA	274583	INDOOR	35÷95	420	350	13	25	3kA@1 seg	14.9/25	12/20(24)kV
GSCC005/12	ED-ITALY	273055	INDOOR	35÷95	420	350	13	25	3kA@1 seg	14.9/25	12/20(24)kV
GSCC005/12	ED-PERU	274250	INDOOR	35÷95	420	350	13	25	3kA@1 seg	14.9/25	12/20(24)kV
GSCC005/12	ED-ROMANIA	273055	INDOOR	35÷95	420	350	13	25	3kA@1 seg	14.9/25	12/20(24)kV
GSCC005/12	ED-SPAIN	200026	INDOOR	35÷95	420	350	13	25	3kA@1 seg	14.9/25	12/20(24)kV
GSCC005/13	ED-BRAZIL	990278	INDOOR	95÷240	420	350	13	25	5kA@1seg	20.6/32.2	12/20(24)kV
GSCC005/13	ED-CHILE	272512	INDOOR	95÷240	420	350	13	25	5kA@1seg	20.6/32.2	12/20(24)kV
GSCC005/13	ED-COLOMBIA	274584	INDOOR	95÷240	420	350	13	25	5kA@1seg	20.6/32.2	12/20(24)kV
GSCC005/13	ED-ITALY	273041	INDOOR	95÷240	420	350	13	25	5kA@1seg	20.6/32.2	12/20(24)kV
GSCC005/13	ED-PERU	274238	INDOOR	95÷240	420	350	13	25	5kA@1seg	20.6/32.2	12/20(24)kV
GSCC005/13	ED-ROMANIA	273041	INDOOR	95÷240	420	350	13	25	5kA@1seg	20.6/32.2	12/20(24)kV
GSCC005/13	ED-SPAIN	270098	INDOOR	95÷240	420	350	13	25	5kA@1seg	20.6/32.2	12/20(24)kV
GSCC005/13	ED-ARGENTINA	0113-0225	INDOOR	95÷240	420	350	13	--	5kA@1seg	20.6/32.2	12/20(24)kV
GSCC005/14	ED-ARGENTINA	0113-0235	INDOOR	300	420	350	13	--	5kA@1seg	29.9/37.5	12/20(24)kV
GSCC005/15	SP -BRAZIL	990276	INDOOR	400	420	350	13	25	5kA@1seg	31/37.5	12/20(24)kV
GSCC005/15	ED-SPAIN	270099	INDOOR	400	420	350	13	25	5kA@1seg	31/37.5	12/20(24)kV
GSCC005/16	ED-PERU	274212	INDOOR	400	420	350	17	25	5kA@1seg	31/37.5	12/20(24)kV

Type code	Distribution Company and Country	Country Code	Terminal Type	Cable section (mm2)	Minimum creepage distance (mm)	Maximum length[a] L (mm)	Palm Hole[b] (mm)	Earthing lug section (mm2)	Rated short time withstand current in the screen (kA)	Min/max Diameter over insulation (mm)	Rated voltage Uo/U (Um) (kV)
GSCC005/17	RJ/CE/GO -BRAZIL	275285	INDOOR	400	420	350	13	50	10kA@0,5seg	31/37.5	12/20(24)kV
GSCC005/17	ED-CHILE	272513	INDOOR	400	420	350	13	50	10kA@0,5seg	31/37.5	12/20(24)kV
GSCC005/18	ED-ARGENTINA	0113-0238	INDOOR	400÷500	420	400	17	--	5kA@1seg	29.9/38.1	12/20(24)kV
GSCC005/19	ED-COLOMBIA	270284	INDOOR	500÷630	420	400	13	50	10kA@0,5seg	36.2/43.5	12/20(24)kV
GSCC005/20	ED-ITALY	273049	INDOOR	400÷630	420	400	13	25	5kA@1seg	35/44	12/20(24)kV
GSCC005/20	ED-ROMANIA	273049	INDOOR	400÷630	420	400	13	25	5kA@1seg	35/44	12/20(24)kV
GSCC005/21	SP -BRAZIL	990275	INDOOR	500÷630	420	400	13	25	5kA@1seg	36.2/43.5	12/20(24)kV
GSCC005/22	RJ/CE/GO -BRAZIL	275286	INDOOR	630	420	400	13	50	10kA@0,5seg	37.9/43.5	12/20(24)kV
GSCC005/22	ED-CHILE	270097	INDOOR	630	420	400	13	50	10kA@0,5seg	37.9/43.5	12/20(24)kV
GSCC005/23	ED-COLOMBIA	274585	OUTDOOR	35÷95	600	450	13	25	3kA@1 seg	14.9/25	12/20(24)kV
GSCC005/23	ED-ITALY	273056	OUTDOOR	35÷95	600	450	13	25	3kA@1 seg	14.9/25	12/20(24)kV
GSCC005/23	ED-ROMANIA	273056	OUTDOOR	35÷95	600	450	13	25	3kA@1 seg	14.9/25	12/20(24)kV
GSCC005/23	ED-SPAIN	200024	OUTDOOR	35÷95	600	450	13	25	3kA@1 seg	14.9/25	12/20(24)kV
GSCC005/24	ED-ARGENTINA (*)	0113-0227	OUTDOOR	35÷95	840	450	13	--	3kA@1 seg	14.9/25	12/20(24)kV
GSCC005/24	ED-BRAZIL	990282	OUTDOOR	35÷95	840	450	13	25	3kA@1 seg	14.9/25	12/20(24)kV
GSCC005/24	ED-CHILE	271919	OUTDOOR	35÷95	840	450	13	25	3kA@1 seg	14.9/25	12/20(24)kV
GSCC005/24	ED-PERU	274251	OUTDOOR	35÷95	840	450	13	25	3kA@1 seg	14.9/25	12/20(24)kV
GSCC005/25	ED-COLOMBIA	274587	OUTDOOR	95÷240	600	450	13	25	5kA@1seg	20.6/32.2	12/20(24)kV
GSCC005/25	ED-ITALY	273069	OUTDOOR	95÷240	600	450	13	25	5kA@1seg	20.6/32.2	12/20(24)kV
GSCC005/25	ED-ROMANIA	273069	OUTDOOR	95÷240	600	450	13	25	5kA@1seg	20.6/32.2	12/20(24)kV
GSCC005/25	ED-SPAIN	270094	OUTDOOR	95÷240	600	450	13	25	5kA@1seg	20.6/32.2	12/20(24)kV
GSCC005/26	ED-BRAZIL	990281	OUTDOOR	95÷240	840	450	13	25	5kA@1seg	20.6/32.2	12/20(24)kV
GSCC005/26	ED-CHILE	271930	OUTDOOR	95÷240	840	450	13	25	5kA@1seg	20.6/32.2	12/20(24)kV
GSCC005/26	ED-PERU	274233	OUTDOOR	95÷240	840	450	13	25	5kA@1seg	20.6/32.2	12/20(24)kV
GSCC005/26	ED-ARGENTINA	0113-0228	OUTDOOR	95÷240	840	450	13	--	5kA@1seg	20.6/32.2	12/20(24)kV
GSCC005/27	ED-ARGENTINA	0113-0236	OUTDOOR	300	840	450	13	--	5kA@1seg	29.9/37.5	12/20(24)kV
GSCC005/28	ED-SPAIN	270095	OUTDOOR	400	600	450	13	25	5kA@1seg	31/37.5	12/20(24)kV
GSCC005/29	ED-PERU	274234	OUTDOOR	400	840	450	17	25	5kA@1seg	31/37.5	12/20(24)kV
GSCC005/30	ED-BRAZIL	990280	OUTDOOR	400	840	450	13	50	10kA@0,5seg	31/37.5	12/20(24)kV

Type code	Distribution Company and Country	Country Code	Terminal Type	Cable section (mm2)	Minimum creepage distance (mm)	Maximum length[a] L (mm)	Palm Hole[b] D (mm)	Earthing lug section (mm2)	Rated short time withstand current in the screen (kA)	Min/max Diameter over insulation (mm)	Rated voltage Uo/U (Um) (kV)
GSCC005/30	ED-CHILE	270014	OUTDOOR	400	840	450	13	50	10kA@0,5seg	31/37.5	12/20(24)kV
GSCC005/31	ED-ARGENTINA	0113-0237	OUTDOOR	400÷500	840	550	17	--	5kA@1seg	29.9/38.1	12/20(24)kV
GSCC005/32	ED-PERU	270190	OUTDOOR	500÷630	840	550	13	25	5kA@1seg	36.2/43.5	12/20(24)kV
GSCC005/33	SP -BRAZIL	990279	OUTDOOR	500÷630	840	550	13	25	5kA@1seg	36.2/43.5	12/20(24)kV
GSCC005/34	ED-COLOMBIA	270283	OUTDOOR	500÷630	840	550	13	50	10kA@0,5seg	36.2/43.5	12/20(24)kV
GSCC005/35	RJ/CE/GO -BRAZIL	275143	OUTDOOR	630	840	450	13	50	10kA@0,5seg	37.9/43.5	12/20(24)kV
GSCC005/35	ED-CHILE	270098	OUTDOOR	630	840	450	13	50	10kA@0,5seg	37.9/43.5	12/20(24)kV
GSCC005/49	ED-PERU	270191	INDOOR	See Local Section				25	5kA@1seg	37.9/43.5	12/20(24)kV

(*) For EDESUR (Argentina), the Outdoor terminal type has a Shear bolt IEC 61238-1 class A (1 hole) (See 7.5.2.1.a))

a: The "L" dimension, as defined in figure 1 and figure 2 for internal and external terminals, respectively

b: The "D Palm Hole" dimension, as defined in table 6 and table 7 for internal and external terminals, respectively

Note: For Cable Rated voltage U0/U (Um) (kV) see Table 4
Note: ED-BRAZIL is the acronym for all the companies of the ENEL group in Brazil RJ/CE/GO/SP

Table 1 - List of Components for cold shrink 12/20(24) kV Indoor and Outdoor Terminations

Type code	Distribution Company and Country	Country Code	Terminal Type	Cable section (mm2)	Minimum creepage distance (mm)	Maximum length[a] L (mm)	Palm Hole[b] D (mm)	Earthing lug section (mm2)	Rated short time withstand current in the screen (kA)	Min/max Diameter over insulation (mm)	Rated voltage Uo/U (Um) (kV)
GSCC005/36	ED-BRAZIL	270308	INDOOR	35÷95	580	450	13	25	3kA@1 seg	20.4/30	18/36(36)kV
GSCC005/36	ED-CHILE	270099	INDOOR	35÷95	580	450	13	25	3kA@1 seg	20.4/30	18/36(36)kV
GSCC005/36	ED-SPAIN	200027	INDOOR	35÷95	580	450	13	25	3kA@1 seg	20.4/30	18/36(36)kV
GSCC005/37	ED-CHILE	270100	INDOOR	95÷240	580	450	13	25	5kA@1seg	24.8/37.2	18/36(36)kV
GSCC005/37	ED-BRAZIL	990274	INDOOR	95÷240	580	450	13	25	5kA@1seg	24.8/37.2	18/36(36)kV
GSCC005/37	ED-CHILE	270100	INDOOR	95÷240	580	450	13	25	5kA@1seg	24.8/37.2	18/36(36)kV
GSCC005/37	ED-COLOMBIA	270293	INDOOR	95÷240	580	450	13	25	5kA@1seg	24.8/37.2	18/36(36)kV
GSCC005/38	ED-ARGENTINA	0113-0230	INDOOR	150÷240	580	450	13	--	5kA@1seg	27.3/37.2	18/36(36)kV
GSCC005/38	ED-SPAIN	270110	INDOOR	150÷240	580	450	13	25	5kA@1seg	27.3/37.2	18/36(36)kV

Type code	Distribution Company and Country	Country Code	Terminal Type	Cable section (mm2)	Minimum creepage distance (mm)	Maximum length[a] L (mm)	Palm Hole[b] D (mm)	Earthing lug section (mm2)	Rated short time withstand current in the screen (kA)	Min/max Diameter over insulation (mm)	Rated voltage Uo/U (Um) (kV)
GSCC005/39	ED-SPAIN	270111	INDOOR	400	580	450	13	25	5kA@1seg	34.9/42.5	18/36(36)kV
GSCC005/39	SP -BRAZIL	990273	INDOOR	400	580	450	13	25	5kA@1seg	34.9/42.5	18/36(36)kV
GSCC005/40	RJ/CE/GO -BRAZIL	270327	INDOOR	400	580	450	13	50	10kA@0,5seg	34.9/42.5	18/36(36)kV
GSCC005/40	ED-CHILE	272510	INDOOR	400	580	450	13	50	10kA@0,5seg	34.9/42.5	18/36(36)kV
GSCC005/41	ED-BRAZIL	270349	INDOOR	630	580	500	13	50	10kA@0,5seg	41.3.9/49.7	18/36(36)kV
GSCC005/41	ED-CHILE	272504	INDOOR	630	580	500	13	50	10kA@0,5seg	41.3.9/49.7	18/36(36)kV
GSCC005/42	ED-BRAZIL	990272	OUTDOOR	35÷95	900	750	13	25	3kA@1 seg	20.4/30	18/36(36)kV
GSCC005/42	ED-CHILE	270101	OUTDOOR	35÷95	900	750	13	25	3kA@1 seg	20.4/30	18/36(36)kV
GSCC005/42	ED-SPAIN	200025	OUTDOOR	35÷95	900	750	13	25	3kA@1 seg	20.4/30	18/36(36)kV
GSCC005/43	ED-BRAZIL	990271	OUTDOOR	95÷240	900	750	13	25	5kA@1seg	24.8/37.2	18/36(36)kV
GSCC005/43	ED-CHILE	270102	OUTDOOR	95÷240	900	750	13	25	5kA@1seg	24.8/37.2	18/36(36)kV
GSCC005/43	ED-COLOMBIA	270292	OUTDOOR	95÷240	900	750	13	25	5kA@1seg	24.8/37.2	18/36(36)kV
GSCC005/44	ED-SPAIN	200022	OUTDOOR	95÷240	900	750	13	25	5kA@1seg	20.6/32.2	18/36(36)kV
GSCC005/45	ED-ARGENTINA	0113-0223	OUTDOOR	150÷240	900	750	13	--	5kA@1seg	27.3/37.2	18/36(36)kV
GSCC005/45	ED-SPAIN	270096	OUTDOOR	150÷240	900	750	13	25	5kA@1seg	27.3/37.2	18/36(36)kV
GSCC005/46	ED-SPAIN	270097	OUTDOOR	400	900	750	13	25	5kA@1seg	34.9/42.5	18/36(36)kV
GSCC005/46	SP -BRAZIL	990283	OUTDOOR	400	900	750	13	25	5kA@1seg	34.9/42.5	18/36(36)kV
GSCC005/47	RJ/CE/GO -BRAZIL	270335	OUTDOOR	400	900	750	13	50	10kA@0,5seg	34.9/42.5	18/36(36)kV
GSCC005/47	ED-CHILE	272506	OUTDOOR	400	900	750	13	50	10kA@0,5seg	34.9/42.5	18/36(36)kV
GSCC005/48	ED-BRAZIL	270350	OUTDOOR	630	900	750	13	50	10kA@0,5seg	41.3.9/49.7	18/36(36)kV
GSCC005/48	ED-CHILE	272507	OUTDOOR	630	900	750	13	50	10kA@0,5seg	41.3.9/49.7	18/36(36)kV

(*) For EDESUR (Argentina), the Outdoor terminal type has a Shear bolt IEC 61238-1 class A (1 hole) (See 7.5.2.1.a))

a: The "L" dimension, as defined in figure 1 and figure 2 for internal and external terminals, respectively

b: The "D Palm Hole" dimension, as defined in table 6 and table 7 for internal and external terminals, respectively

Note: For Cable Rated voltage U0/U (Um) (kV) see Table 4

Note: ED-BRAZIL is the acronym for all the companies of the ENEL group in Brazil RJ/CE/GO/SP

Table 2 - List of Components for cold shrink 18/36(36) kV Indoor and Outdoor Termination

7.2 Service conditions

7.2.1 General service conditions

According to IEC 60721-2-1 (see chapter 4), for Colombia (Enel Distribución Colombia): the reference altitude is 2.700 m.

7.3 Technical characteristics

7.3.1 Electrical Characteristics

The following requirements apply:

Rated voltage U_0/U (U_m) (kV)	**12/20(24)**	**18/30(36)**
Rated power frequency withstand voltage (kV)[2]	50	70
Rated impulse withstand voltage (kV)	125	170
Rated short time withstand current in the conductor (kA)	According to HD629-1 (EN 61442)	
Rated short time withstand current in the screen (kA)	See Tables 1 and Table 2	

Table 3 - Electrical characteristics

The rated voltage levels of the cables for which is foreseen the installation of the joints is the following:

Rated voltage of the termination U_0/U (U_m) (kV)	**12/20(24)**	**18/30(36)**
Distribution Company (Country)	**Rated voltage of the cables U_0/U (U_m) (kV)**	
Enel Distribuição São Paulo (Brazil)	8.7/15(17.5)	15/25(31); 20/35(42)
Enel Distribuição Ceará (Brazil)	8.7/15(17.5)	-
Enel Distribución Colombia (Colombia)	8.7/15(17.5)	18/30(36)
Enel Distribución Chile (Chile)	8.7/15(17.5)	15/25(31)
Enel Distribución Perú (Perù)	8.7/15(17.5); 12/20(24)	-
Edesur (Argentina) Enel Distribuição Rio (Brazil) Enel Distribuição Goiás (Brazil)	8.7/15(17.5)	18/30(36)
e-distribución (Spain)	12/20(24)	18/30(36);12/20(24)*
E-distributie (Romania); E-Distribuzione (Italy)	12/20(24)	-
* Only for 200022		

Table 4 - Rated voltage of the cables

[2] Rated power frequency withstand voltage (kV) values for type test is according to HD629 (EN 61442)

7.4 Overall Dimensions

With reference to Figure 1 and Figure 2, overall dimension of terminations are defined in Table 5:

Rated voltage U_0/U (U_m) (kV)	**12/20(24)**		**18/30(36)**	
Installation Type	**Indoor**	**Outdoor**	**Indoor**	**Outdoor**
Minimum creepage distance (mm)	420	600[a] 840[b]	580	900
Maximum height L (from first hole center of the lug to the support axis) (mm)	350 400[c]	450 550 [b]	450 500[c]	750
Maximum diameter of sheds D (mm)	130	-	130	-

a apply to Enel Distribución Colombia (Colombia), Endesa Distribución Eléctrica (Spain), E-Distributie Banat (Romania), E-Distributie Dobrogea (Romania), E-Distributie Muntenia (Romania), E-Distribuzione (Italy);

b apply to Enel Distribuição Rio (Brazil), Enel Distribución Chile (Chile), Enel Distribuição Ceará (Brazil), Enel Distribución Perú (Perù), Edesur (Argentine);

c: For 400-630 mm2 cross-sections cables.

Table 5 – Overall dimensions for indoor and outdoor installation

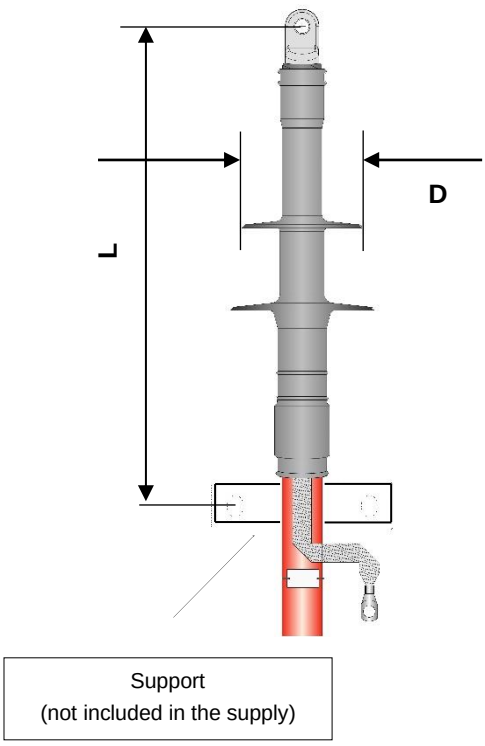

Figure 1 – Indoor termination

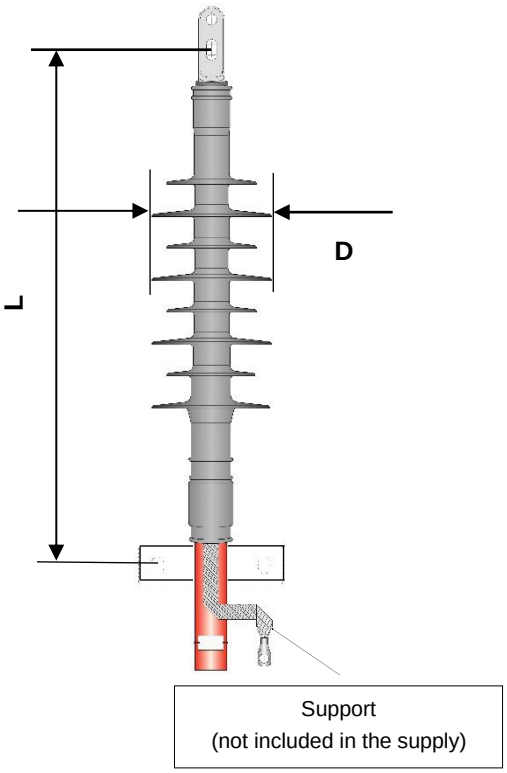

Figure 2 – Outdoor termination

7.5 Construction characteristics

7.5.1 GENERAL CHARACTERISTICS

7.5.1.1 Shrink technology

The terminations shall be cold shrink type[3]

7.5.1.2 Resistance to corrosion, infiltrations, moisture and dust

The external surfaces of terminations shall be resistant to atmospheric conditions that can occur during normal operation (moisture, dust, UV rays, etc.). The insulating body shall ensure non-infiltration of moisture and dust and there shall be no standing water at the seals under normal conditions of installation.

The supplier shall provide appropriate documentation of the material used, the characteristics of aging, the details of construction and assembly demonstrating the reliability of seals; the use of paints, enamels or similar materials is not be considered sufficient to ensure the level of protection required.

Furthermore, special precautions must be taken to avoid the risk of corrosion resulting from contact of different metals. All parts of ferrous material in contact with the air, including hardware, must be made of austenitic stainless steel.

7.5.1.3 Resistance to fire

The insulating housing (see 7.5.2.3) shall be resistant to fire.

7.5.1.4 Heating

All the materials that make up the termination shall withstand the heating conditions expected during operation, without having an adverse effect on their proper functioning of the termination or the cable.

7.5.1.5 Materials compatibility

All the component parts of the joint shall be made out of materials that can be in contact with each other and with the parts that make up the cable, without having an adverse effect on their proper functioning.

Greases and sealing compounds, if any, shall be absolutely neutral in relation to the materials with which they are in contact and shall remain stable in contact with air.

7.5.1.6 Resistance to surface currents

The insulating housing (see 7.5.2.3) shall be resistant to surface currents.

[3] Slip-on type may be accepted as well.

7.5.2 TERMINATIONS

Terminations are composed by the following elements:

1. Shear bolt lug
2. Component to control the electric field
3. Main insulating housing
4. Metallic screen earthing connection
5. Greases and sealing compounds

Items 2 (component to control the electric field) and 3 (main insulating housing) of the above list shall be assembled on the same single body.

It may be designed in order to ensure the following functions (e.g. through embedded sealing compounds):

- to seal the termination.
- to protect the junction of the metallic screen.

7.5.2.1 Shear bolt connector

The shear bolt lug shall be made of tin plated aluminum alloy suitable for both aluminum and copper cables and shall be compliant with IEC 61238-1, Class A.

No additional hole (e.g. for inspection) shall be made. The shear bolts shall be made to break inside their holes, assuring that no spike of any projection of material remain on the lug surface.

The lugs shall have a lock to assure the correct positioning of the conductor, even for the smaller sections.

The internal and external surface of the lugs shall not have sharp edges, spikes or deformities.

Lugs must be designed and constructed so that, when properly installed, the electrical resistance of the connection is not greater than the equivalent resistance of the reference conductor.

It is allowed to use greases to improve the electrical contact between the lug and the cable conductor and avoid corrosion as well as a sealing compound to fill screw cavities of the lug. In any case, the design of screw cavities protection shall be so that no material is dispersed inside the termination during the cold shrinking operation and/or in the installation.

7.5.2.1.a) Palms lugs for indoor terminations

With reference to Figure 3, Table 6 reports the main characteristics and dimensions of the palm lugs for indoor installation:

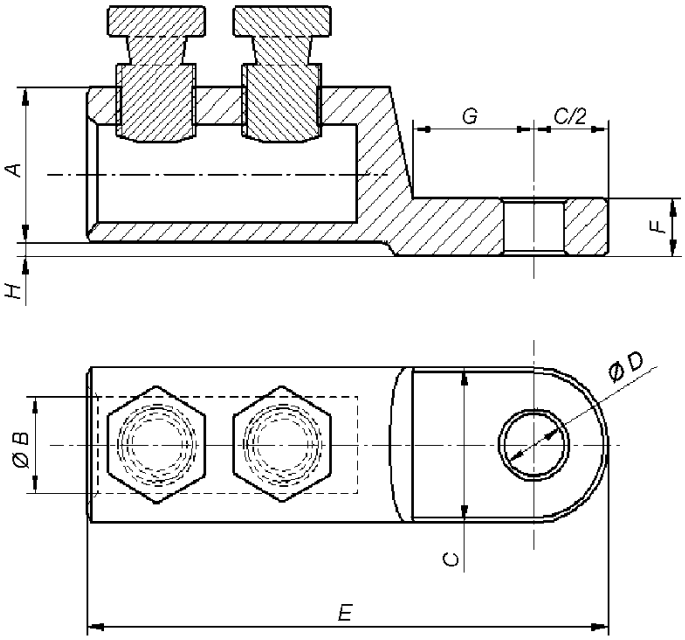

Figure 3 – Indoor lug

Cable section (mm^2)	A max	Ø B min	C max	Ø D ± 0,2	E max	F min	G min	H	nº of screws min
25 ÷ 50	28	7	27	13	105	6,3	12,5		1
25 ÷ 95	28	13	27	13	105	8,5	12,5		1
95 ÷ 240	38	19,5	37	13	130	9	14,5	(*)	2
240 ÷ 400	45	26	42	13; 17[a]	170	12	18,5		2; 3[a]
400 ÷ 630	53	33	52	13; 17[b]	175	20	22		3

a. apply to Enel Distribución Perú (Peru);
b. apply to Edesur (Argentina)
(*) The palm and the barrel shall be on a different quote (to be verified by visual inspection).

Table 6 – Indoor lugs dimensions (mm)

7.5.2.1.b) Palms lugs for outdoor terminations

With reference to Figure 4, Table 7 reports the main characteristics and dimensions of the palm lugs for outdoor installation.

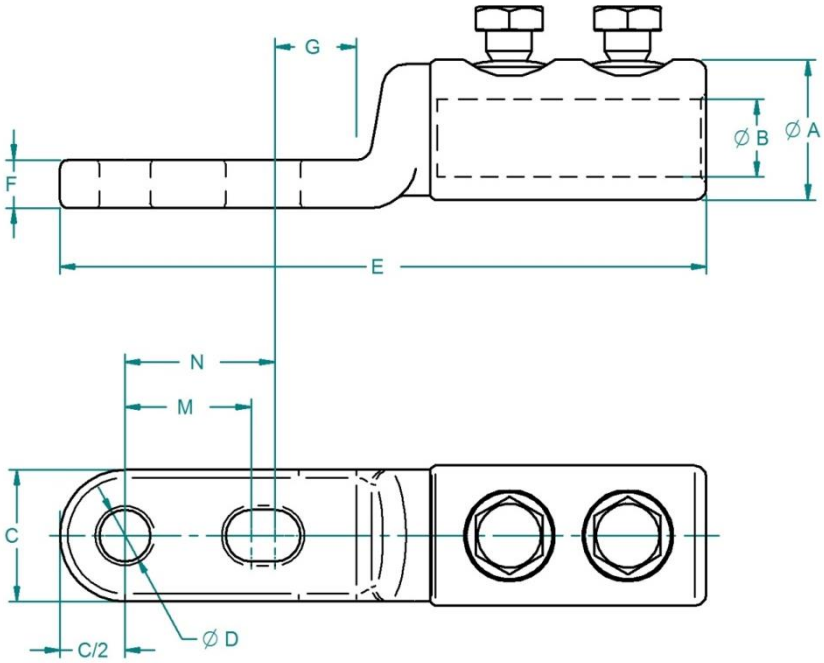

Figure 4 – Outdoor lug

Cable section (mm^2)	A max	Ø B min	C min	Ø D ± 0,2	E max	F min	G min	M -0,5/+0	N -0/+1	nº of screws min
35 ÷ 95	28	13	20	13	143	8,5	12,5	32	45	2
95 ÷ 240	38	19,5	33	13	168	13	14,5	32	45	2
300 ÷ 400	45	26	40	13; 17[a]	208	15	18,5	32	45	2; 3[a]
400 ÷ 630	53	33	52	13; 17[b]	220	20	22	32	45	3

a. Apply to to Enel Distribución Perú (Peru);
b. Apply to Enel Distribuição São Paulo (Brazil);Edesur (Argentina)

Table 7 – Outdoor palm lugs dimensions (mm)

7.5.2.2 Component to control the electric field

It shall be applied on the insulation of the cable and connected to the external cable semiconductor.

7.5.2.3 Main insulating housing

The main insulating housing ensure the prescribed creepage distance (see Table 5).
Only for Outdoor Installation (18/30(36) kV), the main insulating housing may be made of 2 (two) parts.

7.5.2.4 Metallic screen earthing connection

7.5.2.4.a) Earthing lug

The metallic screens of the cables shall be connected to earth by means of a tin plated copper palm straight lug with a M12 screw hole, to be applied by compression with the tools indicated in Figure 5 or equivalent.

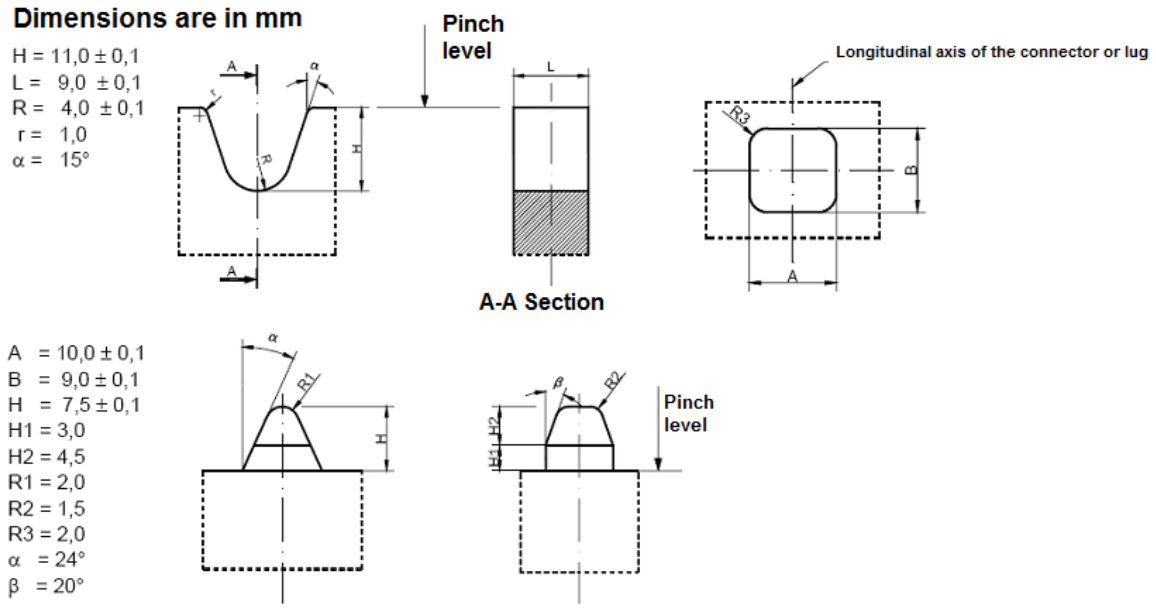

Figure 5 – Tool for compressing the earthing lug

The lug[4] shall be suitable for connecting the metallic screen sections reported in Table 1 and Table 2 (see 7.1). It shall be compatible with both aluminum tape and copper wire cable screens.

The lug shall be supplied un-mounted and compressed on field.

[4] for Edesur (Argentina) no earthing lug is required.

7.5.2.4.b) Cables with aluminum tape screen

In the case of cables with aluminum tape screen, the connection with the screen of the cable shall be made by means of:

1. Plate of tin-plated hard copper with a tin coating having minimum thickness of 0,5 µm. The plate shall be as shown in Figure 6 and shall be bent on a cylinder of diameter 25±2 mm; the convex side of the plate shall include 65 asperities, arranged as shown in the Figure 6. These asperities shall have a particular shape (see example in Figure 6) in order to allow piercing the aluminum tape, to obtain a satisfactory contact with the screen, and to partly penetrate the outer thermoplastic sheath of the cable, to prevent movement or removal of the device. The edge and the internal side of the plate shall be free of sharp or rough parts, in particular in the lower side in contact with the semiconductive layer of the cable. The lower side going under the aluminum tape shall have no protruding edge (an example is shown in Figure 6) but a small rounded edge lower than the asperities.

   As far as possible, the dimensions of the aluminum tape screen are as described here. The supplier can only modify the measurements for use on cables of smaller (35-95 mm2) and larger (400-630) cross-sections in which the dimensions do not allow a correct installation. The proposal will be checked during the TCA process by ENEL.

2. A tin coated copper braid with a minimum length of 0,6 m. One end of the braid shall be welded to the rectangular plate described above at the position shown in Figure 6; the other end shall be connected to the lug described in 7.5.2.4.a). The section of the tin copper braid shall be compatible with the sections prescribed in Table 7.

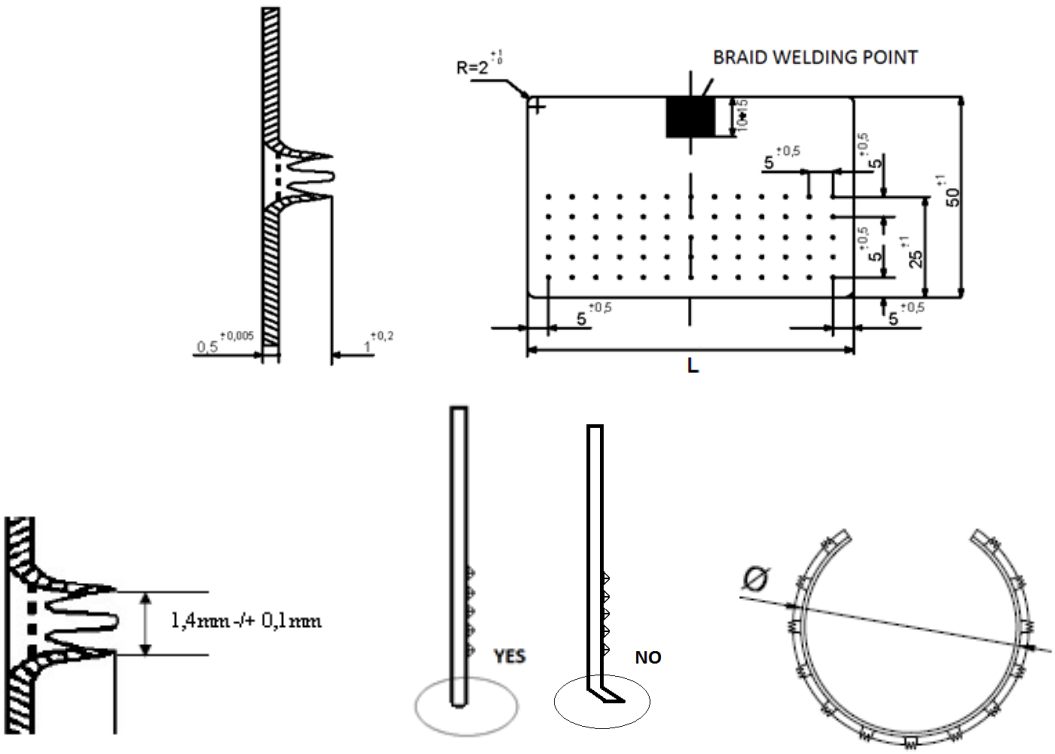

Figure 6 – Detail of rectangular plate for aluminum tape screen connection

7.5.2.4.c) Cables with copper wires screen

For cables with copper wires metallic screen, the earthing connection shall be made by collecting the copper wires of the metallic screen and connecting them to the tin coated copper braid described in 7.5.2.4.b) number 2. In order to do so, the braid shall be cut at the point of welding to the rectangular plate. The connection of copper wires and the tin coated copper braid shall be made by means of the connector described in par. 7.5.2.4.d)

If the distance is sufficient, connection to earth could be made directly connecting the copper wires of the screen to earth with the earthing lug described in 7.5.2.4.a).

7.5.2.4.d) Connector for copper wire screen

The copper wires of the metallic screen of the cable shall be connected to the tin coated copper braid described in 7.5.2.4.b) number 2, by means of a compression straight connector with the tools indicated in or equivalent. The section of the connector shall be compatible with the screen sections prescribed in Table 1 and Table 2 (see 7.1).

The connector shall be supplied un-mounted and compressed on field.

7.5.2.4.e) Greases and sealing compounds

Sealing compounds are not allowed, except those:

- to seal the whole termination,
- to protect the junction of the metallic screen
- inside the lug screws cavities

Greases are not allowed, except those:

- over the main insulation of the cable and over the lug

Greases and sealing compounds shall have no electrical functions for the assembling of the termination but only provide mechanical and/or sealing features.

7.6 CONTENT OF THE KIT

All the necessary elements and accessory to install the termination on-field shall be included, namely:

- 1 (one) shear bolt lug (see 7.5.2.1)
- 1 (one) component to control the electric field (see 7.5.2.2)
- 1 (one) main insulating housing (see 7.5.2.3)
- 1 (one) earthing lug (see 7.5.2.4.a))
- 1 (one) plate for aluminum tape screen cables (see 7.5.2.4.b))
- 1 (one) connector for copper wire screen (see 7.5.2.4.d))
- Greases and sealing compounds (see 7.5.2.4.e))
- Accessories for cleaning.
- Plastic bag for collecting residual materials of installation.
- List of materials.
- Installing instructions and templates (see 7.8.4).
- Identification label (see 7.8.3.2).
- Other materials, tools and accessories (according to supplier's design).

7.7 TESTING

7.7.1 GENERAL

Tests are classified into:

- Type tests
  - Test sequences according to HD 629. (see 7.7.2.1)
  - Additional Type Tests (if applies, see 7.7.2.2)
  - Expiration Test (see 7.7.2.3)
  - UV Resistance Test (if applies, see 7.7.2.4)
  - Lugs Test (see 7.7.2.5)
  - Resistance to fire (see 7.7.2)
- Acceptance tests (see 7.7.3)

They shall be carried out according to HD 629-1 S3. Lugs shall be tested according to IEC 61238-1 class A.

7.7.2 TYPE TEST

Insulating materials shall be tested for resistance to tracking and erosion according to IEC 60587, with 3.5 kV test voltage.

The Supplier shall declare the resistance to fire of the main insulating housing according to IEC 60695-11-10 or another equivalent standard.

7.7.2.1 Test sequences according to HD 629

Type tests for a single material code shall be carried out according to Table 8 on samples installed on XLPE insulated cables with the minimum diameter over insulation (or lower) specified in Table 1 and Table 2. For E-Distribuzione, E-distributie Banat, E-distributie Dobrogea and E-distributie Muntenia, type tests shall be carried out on HPTE or XLPE insulated cables.

Rated voltage of the cables U0/U (Um) (kV)	Cable cross-section selected	Test Sequence	Standard reference
The rated voltage indicated in Table 1 or Table 2 for selected material code.	The maximum section indicated in Table 1 or Table 2 for selected material code.	Sequence A1 and Sequence A2 and A3.	Table 10 or Table 11 for HD 629.1 S3:2019
	The minimum(*) section indicated in Table 1 or Table 2 for selected material code	Sequence A1	Table 10 or Table 11 for HD 629.1 S3:2019
(*) Only for material codes defined to cover a range of cable cross sections			

Table 8 – CENELEC HD 629 Type test.

e.g., 990274 shall be tested on a 240 mm2 – 18/30(36) kV cable sequence A1, A2 and A3 (Table 10, HD 629.1 S3) and 95 mm2 18/30(36) kV cable sequence A1 (Table 10, HD 629.1 S3). The 270095 shall be tested on a 400 mm2 – 12/20(24) cable seq. A1, A2 and A3 (Table 11, HD 629.1 S3).

Extent of compliance

Extension of compliance[5] for the same Terminal design[6] to smaller o larger cross-sections ranges shall be obtained by satisfactory completion of relevant test, according Table 9. It shall be mandatory to perform the required test for the 95-240 mm2 cable range.

Cable cross-section Range (mm2)	**Test Sequence**	**Range Approval (mm2)**				
		35 95	**95 300**	**400**	**500**	**630**
95-240 (*) 300	Seq. A1 from table 10 or Table 11 on 240 mm2 cable Seq. A2 from table 10 or Table 11 on 240 mm2 cable Seq. A3 from table 10 or Table 11 on 240 mm2 cable		Yes			
35-95	Sequence as per Table 17 (**) on 35 mm2 cable	Yes	Yes			
400	Seq. A1 from table 10 or Table 11 on 400 mm2 cable		Yes	Yes		
500	Seq. A1 from table 10 or Table 11 on 500 mm2 cable		Yes	Yes	Yes	
630	Seq. A1 from table 10 or Table 11 on 630 mm2 cable		Yes	Yes	Yes	Yes
(*) Mandatory test to obtain the compliance extension. (**) Test N° 4 in Table 17, should be performed with 63 cycles in water instead of the 12 described in standard HD 629.1 S3:2019 for outdoor terminals.						

Table 9 – Type test for extend compliance

7.7.2.2 ADDITIONAL TYPE TESTS

For Enel Sao Paulo Only, an additional test is required for 18/30(36) kv class Terminal, shall be carried out all the tests prescribed by HD 629-1, table 17 with the Test requirements for Uo/U (Um) 20,8/36(42) kV.

7.7.2.3 EXPIRATION TEST

An expiration test shall be performed in order to verify the capability of the termination to maintain its properties during its life according to the expiry date declared by the manufacturer.

The test shall be performed of a new termination and on a termination of the same lot aged 7 days at 65°C in oven in expanded stage (to simulate 2 years of storage at 35°C of mean temperature).

[5] Compliance shall extend the use of a Terminal on cables of the same Uo as the test cable but with equal or greater nominal insulation thickness.

[6] Same design includes: same architecture, same manufacturing process, same conception, same materials, same sealings, compatible electrical stress.

After ageing, the new termination and the aged termination are put in expanded stage at +5°C during 24h. After that cooling phase, the terminations are installed on the minimum cross-section cable of their reference range.

Then, the following test sequence is applied:

Test	Indoor Termination (table 10 of HD 629-1)	Outdoor Termination (table 11 of HD 629-1)
Partial discharge at ambient temperature	X (test n°2)	X (test n°3)
Immersion	-	X (test n°6)
Lightning impulse voltage test at ambient temperature	X (test n°9)	X (test n°11)
Power-frequency voltage tests	X (test n°1)	X (test n°2)
Partial discharge at ambient temperature	X (test n°2)	X (test n°3)
Visual inspection of water penetration	-	X

Table 10 – Expiration test.

7.7.2.4 UV RESISTANCE TEST FOR MV AERIAL CABLE JOINTS

Outdoor terminations shall be tested according to the IEC 62217 2012 par 9.3.2 (1000 h).

7.7.2.5 Lugs Test

The lugs shall be tested according to IEC 61238-1, class A, and shall be tested both for their maximum and minimum section. The qualification can be extended to an alternative connector by carrying out all tests prescribed by HD 629-1, Table 16. The alternative connector shall comply with all the requirements specified in this document (see 7.5.2.1).

7.7.3 ACCEPTANCE TESTS

For each material code, acceptance tests shall be carried out using the smallest cable section (see Table 1 and Table 2 for reference) for each rated voltage of the cable according to Table 3 (e.g. 200024 shall be tested on a 95 mm2 - 12/20(24) kV cable).

For Enel Distribución Peru acceptance tests shall be carried out using the smallest cable section with 12/20(24) kV rated voltage (e.g. 274233 shall be tested on a 95 mm2 – 12/20(24) kV).

During the acceptance tests performed autonomously by the supplier: The supplier must perform all tests listed in Table 12 with the sampling criteria indicated in Table 11.

The reports of the tests carried out and the tested samples shall be made available in case of repetition of the acceptance tests at the presence of the Enel or designated inspector

During the repetition of the acceptance tests at the presence of the Enel or designated inspector: The test shall be carried out on a sample chosen randomly from the batch already successfully tested by the supplier.

The samplings plans are the follow:

Sample Type	Batch (units)		
	≤ 50 units	> 50 and ≤ 1200	> 1200
A	2 samples	5 samples	10 samples
B	1 sample	2 samples	3 samples
C	1 sample	2 samples	5 samples
D	1 sample	1 sample	2 samples

Table 11 – Samples for acceptance tests

In all cases:

- The quantities are always referred to each type of material code prepared for testing.
- The acceptance number will be 0, and the rejection number will be 1.
- On the scheduled acceptance testing date, the supplier shall prepare the cables, stripped as required by the assembly instructions of terminals being tested. This will facilitate the terminal assembly and reduce the testing time, which benefits both parties.

All the tests to be performed and the relative sampling are listed in the following table:

Test	Sampling during execution by Supplier	Sampling during repetition by Enel	Note
1. Visual check, Accessory manufacturing specifications check, and joint marking	A	C	- Verification of correspondence to the approved prototype (dimensions, completeness of the accessory kit, presence, and correctness of identification labels and joint marking, packaging, and barcodes). - The nominal tightening torque of shear bolts specified by the manufacturer shall always be verified.

Test	Sampling during execution by Supplier	Sampling during repetition by Enel	Note
2.Accessory assembly check	B	D	- Check the assembly according to the approved manual.
3. Power-frequency withstand test	B	D	- Required values according to table N° 3 and test description according to IEC-61442.
4. Partial discharge test at ambient temperature	B	D	

Table 12 – Acceptance tests

7.7.4 RETIE Certification (only apply to Enel Distribución Colombia)

For Enel Distribución Colombia (Colombia), RETIE certification shall be also provided according to local regulation (see chapter 4). It is requested that this certification be made under the scheme 5 (ISO IEC 17067).

7.8 Conditions of Supply

7.8.1 Warranty

The manufacturer shall guarantee that the cold shrink terminations are supplied to meet all requirements of this technical specification.

the cold shrink terminations shall be warranted against manufacturing defects for a period of 2 years.

7.8.2 Labelling

The joint must bear the following information:

a) Name of the manufacturer;
b) Maximum voltage Um in kV
c) Year and month of manufacture (e.g.: 15/2);

In particular, this information shall be placed on the external sheath of the joint by means of indelible and permanent screen printing or an equivalent method accepted by the Distribution Companies of Enel Group.

7.8.3 Packaging

Joints shall be supplied in individual packages which shall bear the following information:

- Material code assigned by the Distribution Companies of Enel Group;
- Name of the manufacturer;
- Type of termination (e.g. cold shrink outdoor termination);
- Type of cables for which the accessory is intended, section and conductive material allowed;
- Year and month of packaging;
- Progressive identification number assigned by the manufacturer (or serial number);
- Barcode (see 7.8.3.1)
- Production batch number;
- Identification abbreviation;
- Maximum voltage Um in kV;
- Expiry date (year/month) of the materials.

Furthermore, the packages shall contain a self-adhesive label with the following information (only for E-distribuzione and Endesa Distribucion):

- Manufacturer identification code (CUI);
- Material code assigned by the Distribution Companies of Enel Group;
- Year and month of manufacture (e.g.: 15/2);
- Progressive identification number (assigned by the manufacturer);
- Barcode (see 7.8.3.1)

For E-distribuzione, shipping (of several individual packages) shall meet the requirements of the packaging in compliance with GUI 101 specifications.

7.8.3.1 Barcode

The characteristics of the barcode are listed in E-distribuzione specification PVR 006 and Global Infrastructure and Networks Barcode specification CNS-O&M-S&L-2021-0032-EGIN

7.8.3.2 Identification label

It shall include blank fields to be filled after installation:

Name: ……
Date: ……
Company: ……

7.8.4 Installation instructions and templates

The instruction for the preparation of the cable shall be written in compliance with Enel Global Standard (GSCC015). For E-distribuzione the technical specification DJ4580 also applies.

Accessory assembly instructions shall be written on A4 paper, and the various stages of construction of the joint shall be illustrated by photographs or diagrams in color.

Templates shall be included for the following types of cables:

- Extruded cables with aluminum tape screen
- Extruded cables with copper wires screen

Furthermore, for processing steps that require the use of a special tool, the description of these operations shall be accompanied by the Distribution Companies of Enel Group material code/type code[7] for the tool and a color photograph.

Additionally a QR code shall be included for each step of the installation instructions to provide a web-link to demonstration videos and tutorials on the related joint. The videos shall be in the local language of the Country of delivery.

Installing instruction and templates shall be in the local language of the Country of delivery and shall be approved by Distribution Companies of Enel Group.

7.9 TECHNICAL CONFORMITY ASSESMENT

7.9.1 General conditions

The manufacturer shall provide personnel and equipment necessary to carry out type tests and acceptance tests described herein. Otherwise, the supplier could hire the service to a laboratory previously accepted by the customer and assume the cost. The product shall comply with the requirements of GSCG002 regarding the Technical Conformity Assessment.

The equipment should be properly calibrated by a laboratory certified or approved by the client. The manufacturer shall possess up to date calibration certificates (to turn over) at the time of inspection.

7.9.2 Acknowledgement of TCA for previous revision of the standard.

Products with TCA in force under the ENEL Global standard GSCC005 Rev 3 of 09/07/2018 and their respective addendums will be recognized as homologated material for the present technical specification. Enel, therefore, reserves the right to check that the conditions of supply, contents of the kit, type codes, country codes, manuals, labels, etc., shall comply with the requirements of this technical specification.

[7] This information, if any, will be provided by Distribution Companies of Enel Group during the examination of the installation instructions (before the certification process)

8 ANNEXES

8.1 Technical Check List example

The following chart indicates the minimum technical information that suppliers shall provide.

Item	Description	Unit	Required	Offered
1	**GENERAL INFORMATION**			
1.1	Supplier	-		
1.2	Factory	-		
2	**MAIN FEATURES**			
2.1	Distribution Company and Country	-		
2.2	Country Code	-		
2.3	GS Type Code			
2.4	Rated voltage U0/U (Um)	(kV)		
2.5	Installation Type			
2.5	Rated power frequency withstand voltage	(kV)		
2.6	Rated impulse withstand voltage			
2.7	Rated short time withstand current in the conductor			
2.8	Rated short time (0,5 s) withstand current in the screen.			
2.9	Maximum length L	(mm)		
2.10	Maximum diameter D	(mm)		
2.11	Shrink Technology			
2.12	Resistance to fire			
2.13	Type of connector			
2.14	Copper stocking cross section	(mm2)		
2.15	Cable section	(mm2)		
2.16	Min/max diameter over insulation	(mm)		
2.17	Lug: A maximum (mm)	(mm)		
2.18	Lug: B minimum (mm)	(mm)		
2.19	Lug: C minimum (mm)	(mm)		
2.20	Lug: D dimension (mm)	(mm)		
2.21	Lug: E maximum (mm)	(mm)		
2.22	Lug: F minimum (mm)	(mm)		
2.23	Lug: G minimum (mm)	(mm)		
2.24	"Lug: M dimension (mm -0.5/+0)"	(mm)		
2.25	"Lug: N dimension (mm -0/+1)	(mm)		
2.26	Number of screws of shear bolt lug (minimum)	(mm)		
The "L" and “D” dimensions, as defined in figure 1 and 2 for internal and external terminals, respectively The “A to M” dimensions, as defined in figure 6 and 7 for internal and external lugs, respectively				

Table 13 – Check list

LOCAL SECTION A – ENEL DISTRIBUCIÓN PERÚ

The country code 270191, from Peru, is for all purposes defined according to the type code GSCC005/49 (12/20(24) kV Indoor Terminal), with the following exceptions:

<table>
<tr><th>ITEM</th><th>TITLE</th><th>DESCRIPTION</th></tr>
<tr><td>7.4</td><td>OVERALL DIMENSIONS</td><td>Overall dimensions of termination are defined in Table A.1
<table>
<tr><th>Country Code</th><th>270191</th></tr>
<tr><td>Minimum creepage distance (mm)</td><td>420</td></tr>
<tr><td>Maximum height L (from first hole center of the lug to the support axis) (mm)</td><td>500</td></tr>
<tr><td>Maximum diameter of sheds D</td><td>NO SHEDS</td></tr>
</table>
Table A.1 Overall dimensions for 270191 code.
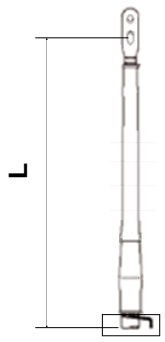

Figure A.1 Indoor termination without sheds</td></tr>
<tr><td>7.5.2.1a)</td><td>Lugs for indoor terminations</td><td>The main characteristics and dimensions of the palm lugs for special indoor installation:
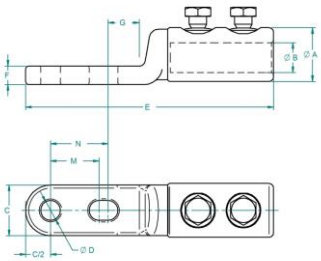

Figure A.2 Special Indoor Lug for country code 270191
<table>
<tr><th>Cable section (mm²)</th><th>A max</th><th>Ø B min</th><th>C min</th><th>Ø D ± 0,2</th><th>E max</th><th>F min</th><th>G min</th><th>M -0,5/+0</th><th>N -0/+1</th><th>nº of screws min</th></tr>
<tr><td>500 ÷ 630</td><td>53</td><td>33</td><td>52</td><td>17</td><td>220</td><td>20</td><td>22</td><td>32</td><td>45</td><td>3</td></tr>
</table>
Table A.2 Special Indoor palm lug dimensions (mm) for country code 270191</td></tr>
</table>