In-source laser spectroscopy of polonium isotopes: From atomic physics to nuclear structure

S. Rothe [1], A.N. Andreyev[2], S. Antalic[3], A.E. Barzakh[4], B.Bastin[5], T.E. Cocolios[6,1], D.V. Fedorov[4], V.N. Fedosseev[1], D.A. Fink[7,8],
K.T. Flanagan[6], L. Ghys[9,10], M. Huyse[9], N. Imai[11], T. Kron[12], K.M. Lynch[9], B.A. Marsh[1], D. Pauwels[10], E. Rapisarda[1],
S.D. Richter[12], R.E. Rossel[1,12] , M.D. Seliverstov[4], A.M. Sjödin[5], C. Van Beveren[9], P. Van Duppen[9] and K.D.A Wendt[12]

[1] CERN, CH-1211 Geneva, Switzerland
[2] Department of Physics, University of York, York YO10 5DD, United Kingdom
[3] Department of Nuclear Physics and Biophysics, Comenius University, SK-842 48 Bratislava, Slovakia
[4] Petersburg Nuclear Physics Institute, NRC Kurchatov Institute, 188300 Gatchina, Russia
[5] Grand Accelerateur National d'Ions Lourds, FR-14076 Caen, France
[6] School of Physics and Astronomy, University of Manchester, Manchester M13 9PL, United Kingdom
[7] Max-Planck-Institut für Kernphysik, DE-69117 Heidelberg, Germany
[8] Fakultät für Physik und Astronomie, Ruprecht-Karls Universität, DE-69120 Heidelberg, Germany
[9] Instituut voor Kern- en Stralingsfysica, KU Leuven, BE-3001 Leuven, Belgium
[10] Belgian Nuclear Research Centre SCK - CEN, BE-2400 Mol, Belgium
[11] High Energy Accelerator Research Organization (KEK), Tsukuba, Ibaraki 305-0801, Japan
[12] Institut für Physik, Johannes Gutenberg-Universität Mainz, DE-55128 Mainz, Germany

Introduction

In-source laser spectroscopy is a powerful method to investigate optical spectra of radioisotopes created at on-line radioactive ion beam facilities such as CERN-ISOLDE.

Through the measurements of isotope shift and hyperfine splitting of the atomic spectrum an isotope one can derive nuclear ground state properties (change in mean-square charge radius $\delta\langle r^2\rangle$, spin, magnetic dipole moment, el. quadrupole moment) [1].

Figure **1** shows the evolution of $\delta\langle r^2\rangle$ measured for even Z elements from Pt to Ra. The most prominent feature is the extreme odd-even staggering of the n-deficient Hg. For Po, the onset of deformation is clearly seen as a departure from the trend-line of the largely spherical lead isotopes [2,3]. For the n-rich region, a reversal of the odd-even staggering (seen in Ra) would be an indicator of octupolar deformation interpreted as a pear-shaped nucleus [4]. The results shown for n-rich Po were obtained at CERN-ISOLDE using the Resonance Ionization Laser Ion Source (RILIS) [5] as a precision spectroscopy tool. Missing data is attributed to the overwhelming background of Fr contamination. The RILIS makes use of step-wise resonant excitation of the atom using lasers tuned to specific optical transitions of an element. A last step releases the electron by lifting it above the ionization energy (IE).

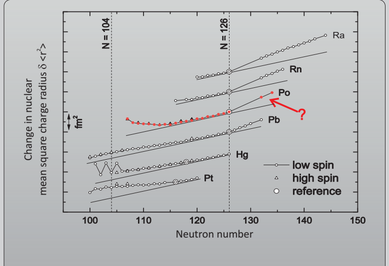

Figure 1|Changes in nuclear charge radius for even-Z nuclei from Pt to Ra [8]. Note the strong odd-even staggering for Hg around N=104. The odd-even staggering is reversed for n-rich Rn and Ra - indicating octupole deformation.

In fact the IE is a fundamental property of the atom that can also be studied by in-source laser spectroscopy using the RILIS . The precision of the IE value of Po can be improved by spectroscopy of high-lying Rydberg states as demonstrated recently for At [6].

Improved Setup

① Development of the Laser Ion Source and Trap (LIST) [7,8]

- Combination of linear RFQ trap and surface ion repeller
- significantly reduces the isobaric background
- selectivity improved by ~500 (suppression of up to 10^4, loss of 20) [9]

② Advanced RILIS laser spectroscopy capabilities [10]

- solid-state titanium:sapphire (Ti:Sa) lasers [11]
- computer controlled dye laser system, Nd:YAG pumped
- narrow bandwith Ti:Sa operation (NB-Ti:Sa, < 1 GHz) [12]

③ LabVIEW based data acquisition system [13]

- automated scanning of NB Ti:Sa laser
- recording and live display of the spectra
- integration of ISOLDE Faraday Cups, IKS Windmill , ISOLTRAP MR-ToF

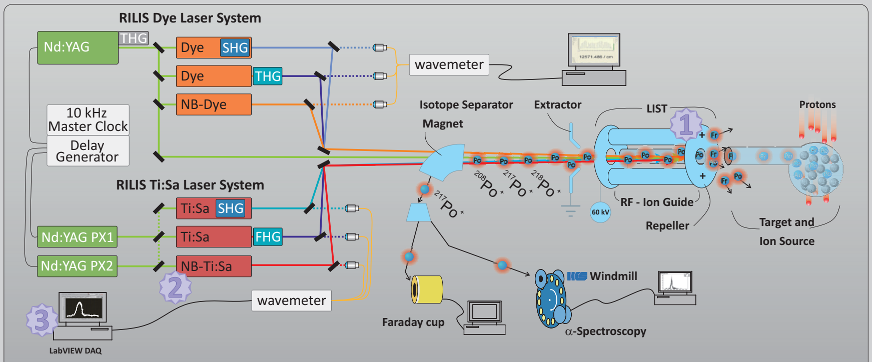

Figure 2 |Setup for the in-source laser spectroscopy of polonium. The computer controlled tunable dye and Ti:Sa lasers are sent through the ISOLDE separator magnet into the target and ion source assembly. The reaction products created by the proton-induced nuclear reaction are vaporized and are collimated by the hot cavity ionizer. The LIST repeller repells surface ionized contaminants such as Fr. The lasers ionize the atoms entering the RFQ ion guide. The ions are accelerated to 60kV, mass-separated and then detected by a FC or the WINDMILL.

Results and Analysis

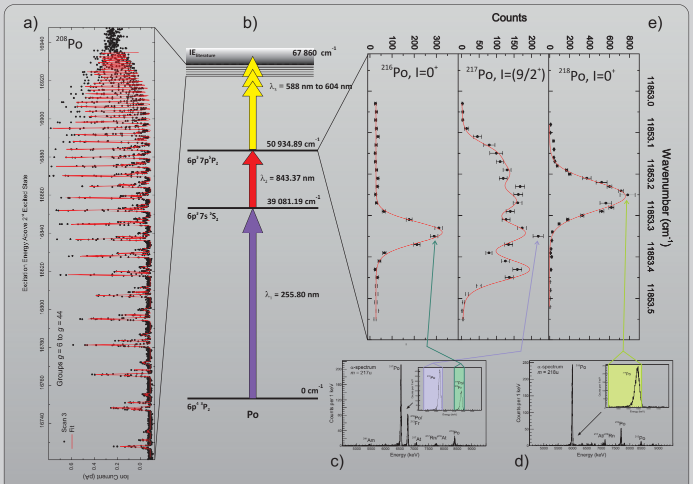

Figure 3 | Results from the in-source laser spectroscopy of polonium. a) Rydberg spectrum of Po. b) Ionization scheme for Po. The last step was scanned to obtain a). The second step was scanned and α-decay spectra c,d) The gated signal reveals the hyperfine spectra displayed in e). Figures taken from [8]

The ionization energy of polonium

- Scan of third step (λ_3) reveals converging series of Rydberg levels (Figure **3**a)
- 5 Series to different quantum defects can be distinguished for small quantum numbers n
- Conventional Rydberg analysis (Figure **4**a) yields IE(Po)=67896(1) cm^{-1}
- Perfect agreement with results obtained simultaneously at TRIUMF-ISAC [14]
- An alternative analysis method was successfully applied: Enables direct extraction of the IE from data through correlation with theoretical spectra (Figure **4**b)

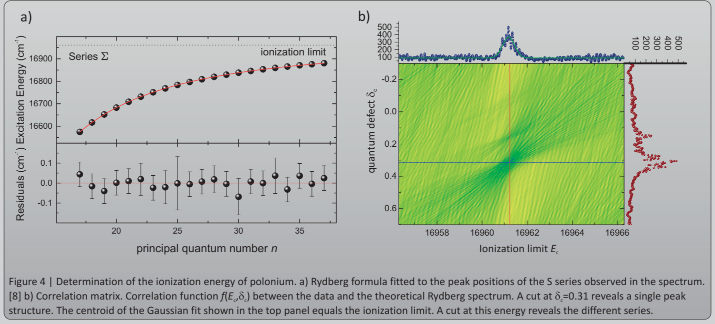

Figure 4 | Determination of the ionization energy of polonium. a) Rydberg formula fitted to the peak positions of the S series observed in the spectrum. [8] b) Correlation matrix. Correlation function $f(E_c,\delta_c)$ between the data and the theoretical Rydberg spectrum. A cut at δ_c=0.31 reveals a single peak structure. The centroid of the Gaussian fit shown in the top panel equals the ionization limit. A cut at this energy reveals the different series.

Odd-even staggering of polonium

- NB-Ti:Sa (λ_2) was scanned across the $6p^3\,7p\,^5P_2$ energy level
- IKS Windmill recorded α-spectra at each wavelength step
- The Fr background was fully suppressed by LIST
- Gates were applied for characteristic α-energies (Figures **3**c,d)
- Changes in mean-square charge radius with respect to ^{210}Po were extracted (Figure **5**a)
- Relative odd-even staggering plot (Figure **5**b) indicates normal odd-even staggering in contrast to the reversed odd-even staggering Rn and Ra
- Po marks a lower limit of the end of the region of inverted odd-even staggering.

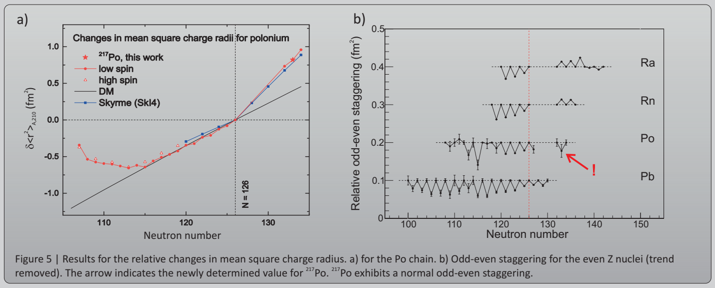

Figure 5 | Results for the relative changes in mean square charge radius. a) for the Po chain. b) Odd-even staggering for the even Z nuclei (trend removed). The arrow indicates the newly determined value for ^{217}Po. ^{217}Po exhibits a normal odd-even staggering.

References

[1] E. W. Otten, Treatise on Heavy-Ion Science, Vol. 8, p. 517(1989)
[2] T. E. Cocolios et al., Phys. Rev. Lett., 106:052503 (2011)
[3] M. D. Seliverstov et al., Phys. Lett. B 719, 362-366 (2013)
[4] L. P. Gaffney et. al.,Nature 497, 199–204 (09 May 2013)
[5] V. N. Fedosseev et al., Rev. Sci. Instrum. 83, 02A903 (2012)
[6] S. Rothe et al., Nat. Commun. 4, 1835 (2013)
[7] K. Blaum,et al., NIMB 204, 331–335 (2003)
[8] D. A. Fink, Thesis, Ruprecht-Karls Universität, Heidelberg, Germany (2014)
[9] D. A. Fink et al., Nucl. Instrum. Meth. B 317, 417421 (2013)
[10] B. A. Marsh et al., Nucl. Instrum. Meth. B 317, p.550 (2013)
[11] S. Rothe, Thesis, Johannes Gutenberg-Universität, Mainz, Germany (2012)
[12] S. Rothe et al., Nucl. Instrum. Meth. B 317, 561564 (2013)
[13] R. E. Rossel et al., Nucl. Instrum. Meth. B 317, 557560 (2013)
[14] S. Raeder, D.Fink et al. (in preparation)

Contact

Dr. Sebastian Rothe
Sources, Targets & Interactions Group
Engineering Department
CERN
Email: Sebastian.ROTHE@cern.ch

June 2014