MicroMod ESP32 Processor Board
WRL-16781

Dedicated GPIO

A0 - ESP32 pin 34, MicroMod pad 34 (Input Only!)
A1 - ESP32 pin 35, MicroMod pad 38 (Input Only!)
D0 - ESP32 pin 14, MicroMod pad 10
D1 - ESP32 pin 27, MicroMod pad 18
PWM0 - ESP32 pin 13, MicroMod pad 32
PWM1 - ESP32 pin 12, MicroMod pad 47
Primary SPI - ESP32 Pins 5/18/23/19, MicroMod Pins 55/57/59/61
Primary I^{2}C - ESP32 Pins 21/22, MicroMod Pins 12/14
I^{2}C Interrupt - ESP32 Pin 4, MicroMod Pin 16

Pin Number	Power	GND	Control
Digital Pin	ADC	PWM	Serial UART
I^{2}C	SPI	CAN	USB
SWD	Audio	Camera	General/Bus
SDIO	Arduino		

Top of Board

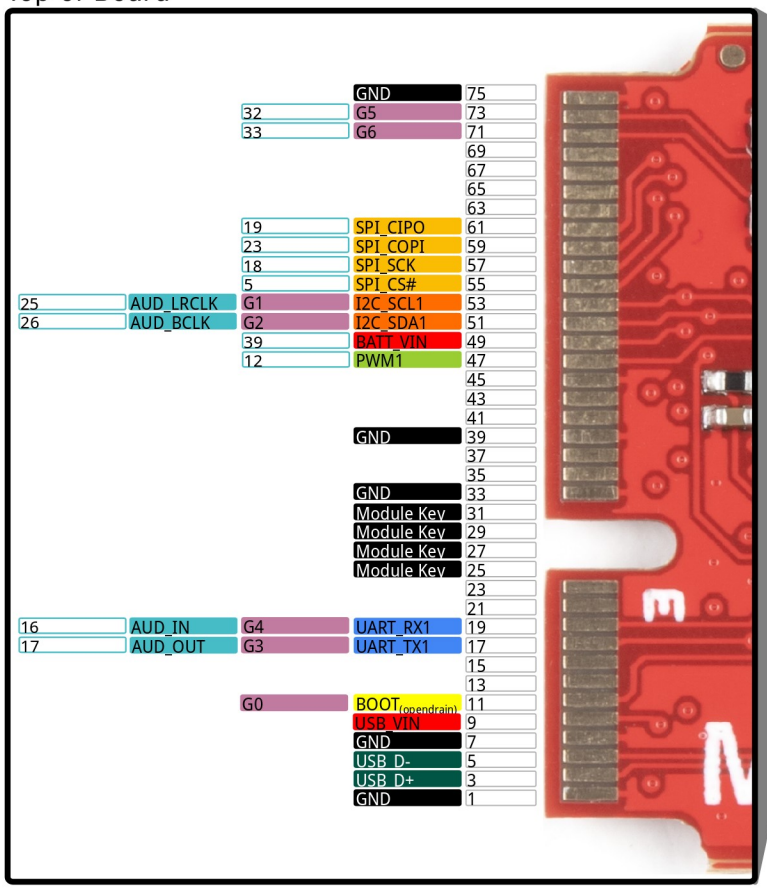

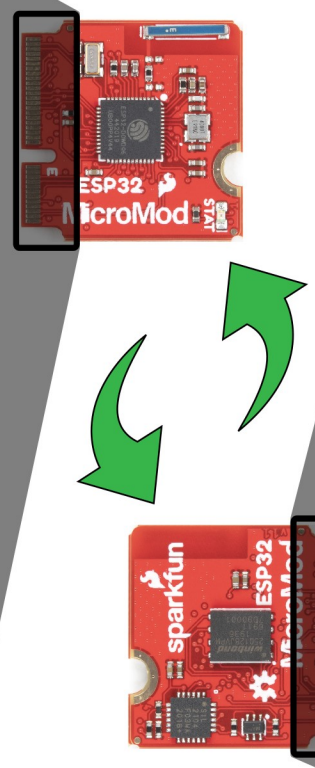

Bottom of Board

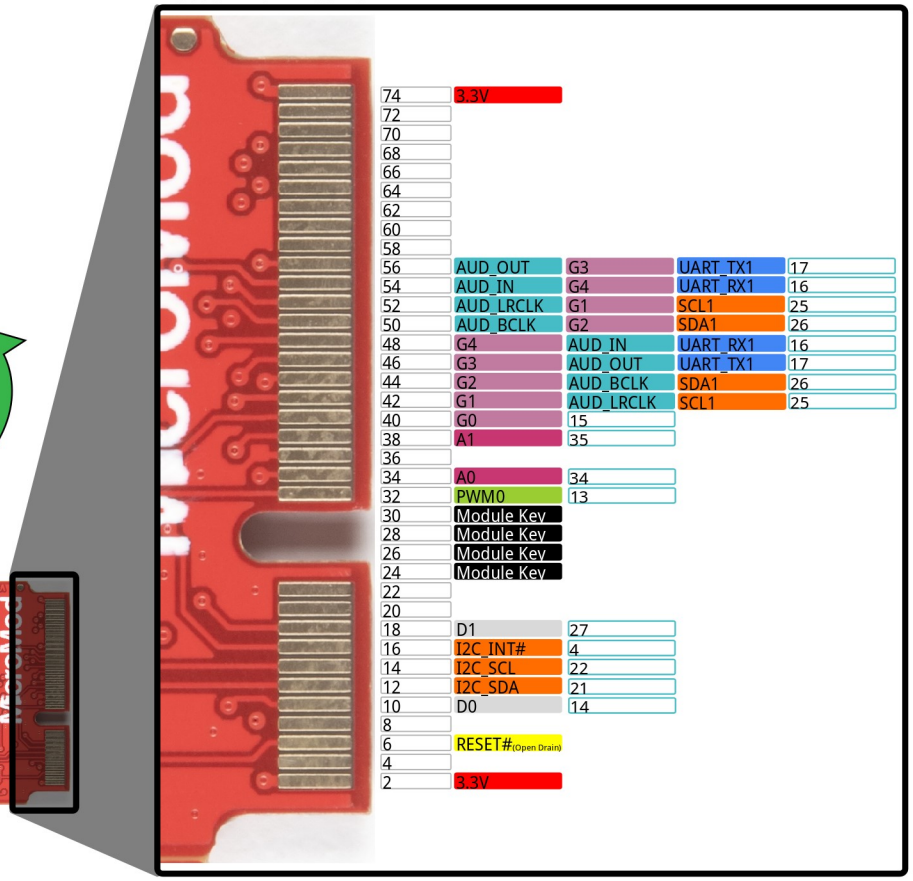

Power

Operating: 2.7 to 3.6V
500uA sleep current (hibernation)
Maximum current: 3.3V

ESP32

Dual-core Tensilica LX6 microprocessor
Clock frequency: Up to 240MHz
520kB internal SRAM
16MB Flash Storage

Wireless

Integrated 802.11 B/G/N WiFi transceiver
Integrated dual-mode Bluetooth (classic and BLE)

LED

Stat (D2):Blue

Other

Hardware accelerated encryption (AES, SHA2, ECC, RSA-4096)
10-electrode capacitive touch support

General Purpose/Shared GPIO

G0 - GPIO pin 15, MicroMod pad 40
G1 - GPIO pin 25, MicroMod pad 42 - Shared with I2S bus and secondary I^{2}C bus.
G2 - GPIO pin 26, MicroMod pad 44 - Shared with I2S bus and secondary I^{2}C bus.
G3 - GPIO pin 17, MicroMod pad 46 - Shared with I2S bus and secondary UART.
G4 - GPIO pin 16, MicroMod pad 48 - Shared with I2S bus and secondary UART.
G5 - GPIO pin 32, MicroMod pad 73 - Shared with 32KHz RTC crystal.
G6 - GPIO pin 33, MicroMod pad 71 - Shared with 32KHz RTC crystal.

MicroMod

sparkfun ELECTRONICS

CC BY SA