arXiv:hep-ph/0012087v1 7 Dec 2000

Sensitive Search for a Permanent Muon Electric Dipole Moment.[a]

Y.K. Semertzidis, H. Brown, G.T. Danby, J.W. Jackson, R. Larsen,
D.M. Lazarus, W. Meng, W.M. Morse, C. Ozben, R. Prigl
Brookhaven National Lab, Upton, New York 11973

R.M. Carey, J.P. Miller, O. Rind, B.L. Roberts, L.R. Sulak
Department of Physics, Boston University, Boston, Massachusetts 02215

V. Balakin, A. Bazhan, A. Dudnikov, B.I. Khazin, G. Sylvestrov
Budker Institute of Nuclear Physics, Novosibirsk, Russia

Y. Orlov
Newman Laboratory, Cornell University, Ithaca, New York 14853

K. Jungmann
Physikalisches Institut der Universitat Heidelberg, 69120 Heidelberg, Germany

P.T. Debevec, D.W. Hertzog, C.J.G. Onderwater
Physics Department, University of Illinois at Urbana-Champaign,
Urbana-Champaign, Illinois 61801

E.J. Stephenson
Indiana University Cyclotron Facility, Bloomington, Indiana 47408

P. Cushman, I. Kronkvist
Department of Physics, University of Minnesota, Minneapolis, Minnesota 55455

F.J.M. Farley
Department of Physics, Yale University, New Haven, Connecticut 06511

We are proposing a new method to carry out a dedicated search for a permanent electric dipole moment (EDM) of the muon with a sensitivity at a level of 10^{-24} e·cm. The experimental design exploits the strong motional electric field sensed by relativistic particles in a magnetic storage ring [1,2]. As a key feature, a novel technique has been invented in which the g-2 precession is compensated with radial electric field. This technique will benefit greatly when the intense muon sources advocated by the developers of the muon storage rings and the muon colliders become available.

[a]Submitted for publication in Proceedings of the International Workshop on High Intensity Muon Sources (HIMUS99), KEK, Japan, December 1-4 1999.

1 Motivation

The standard model of particle physics is a very successful theoretical framework, which describes all confirmed observations to date. However, the model leaves important questions concerning the physical nature of observed processes unexplained, although it provides an accurate description of them. Among the not yet understood phenomena are the reasons for parity violation, the particle masses, the violation of the CP symmetry. CP violation is the only known mechanism that could explain the matter antimatter asymmetry found in the universe. In order to obtain a deeper insight, speculative models have been suggested which often are connected to observable deviations from standard theory predictions, particularly violations of assumed symmetries or yet unknown properties of particles. The spectrum of these theories includes super symmetry [3,4], left-right symmetry [5], multi Higgs scenarios [6,7] and many other important approaches. This strongly motivates sensitive searches for forbidden decays, e.g. the lepton number violating muon electron conversion [8] , the decay $\mu \to e\gamma$ [9] and precise measurements of particle characteristics such as the muon magnetic moment anomaly [10].

A fundamental particle is described by only a few parameters such as its mass, its intrinsic angular momentum, its electric charge (electric monopole moment), its magnetic dipole moment, and a set of conserved quantum numbers, like lepton flavor [11]. A permanent EDM has not been observed for any of them. It would violate both parity (P) and time reversal (T) invariance. If CPT is assumed to be a valid unbroken symmetry, a permanent EDM would hence be a signature of CP violation [12,3].

The standard model of particle physics predicts a CP violating EDM in fundamental particles at the multi loop level of amplitude more than five orders of magnitude below the sensitivity of present experiments [13] (see Table 1). Therefore searches for a permanent particle EDM render excellent opportunities to test models beyond standard theory where in some cases they predict effects as large as the presently known experimental bounds. Despite the non-observation of a positive EDM signal such research has nevertheless been most successful in steering the development of theoretical particle physics over many decades and also was the incentive for the ever increasing precision in the experiments themselves. The absence of any observed finite EDM for the neutron, for example, has disfavored more speculative models than any other experimental approach so far [14].

Searches for EDMs have been performed with highest sensitivity for electrons [18] (e) and neutrons [22] (n). Further there are experimental limits for muons [19] (μ), tauons [20] (τ) and protons [21] (p) (Table 1). The experiments

Table 1: Limits on Electric Dipole Moments d for electrons (e), muons (μ), tauons (τ), protons (p) and neutrons (n). For various models the scaling with the lepton mass is stronger than linear (x>0). The number in the first parenthesis for the electron case refers to the statistical error and the second to the systematic.

	Present Limit on $\lvert d\rvert$ [10^{-27} e $\cdot$ cm]	Standard Model Prediction [10^{-27} e $\cdot$ cm]	New Physics Limits [10^{-27} e $\cdot$ cm]
e	$1.8\,(1.2)\,(1.0)$	$\lesssim 10^{-11}$	$\lesssim 1$
μ	$< 1.05 \cdot 10^{9}$ (95% C.L.)	$\lesssim 10^{-8}$	$\lesssim 200 \times (\frac{m_\mu}{m_e})^x$
τ	$< 3.1 \cdot 10^{11}$ (95% C.L.)	$\lesssim 10^{-7}$	$\lesssim 1700 \times (\frac{m_\tau}{m_e})^x$
p	$-3.7\,(6.3) \cdot 10^{4}$	$\sim 10^{-4}$	$\lesssim 60$
n	$< 63 \cdot 10^{0}$ (90% C.L.)	$\sim 10^{-4}$	$\lesssim 60$

include beams of neutral atoms, molecular beams, stored neutrons and stored charged particles. In heavy atoms and particularly in polar molecules there are substantial enhancement factors due to the utilization of the rather strong internal electric fields within these systems [15].

The upper bound extracted from electron and neutron experiments already disfavor super-symmetric models with CP violating phases of order unity and suggest variants with phases of order α/π [16,17]. Other significant restrictions of the parameter space would also be an option, however at a loss of generality. A muon EDM experiment at 10^{-24} e $\cdot$ cm will be competitive here. Moreover, it will provide valuable complementary information, because the muon belongs to the second generation of particles where in the quark sector CP violation occurs. In two Higgs doublet models [6] with large ratios for the vacuum expectation values of the involved Higgs fields ($\tan\beta$ (≤ 15)) and for left right symmetry a muon EDM could be as large as a few 10^{-24} e $\cdot$ cm [5] and some special models allow values up to 10^{-21} e $\cdot$ cm [5].

Sensitive searches are presently being carried out on neutral objects, i.e. neutrons, atoms and molecules. This choice was strongly influenced by the Ramsey-Purcell-Schiff theorem [23] which states that for point-like charged objects in electromagnetic equilibrium, the net electric field averages to zero. The widely known loopholes so far were weak and strong nuclear forces, weak electron-nucleon forces and relativistic forces. It is recognized now that this theorem is also not applicable to particles in a storage ring, particularly to the method proposed here, where motional fields are employed, because it is not possible to factorize particle velocity and electric field, which constituted the basis of the theorem [24,23]. Therefore these electric fields, which are very strong for relativistic particles, can be beneficially exploited. Such fields can

be three orders of magnitude larger than technically achievable fields between electrodes, where 5.5 MV/m are regarded an upper limit.

It should be mentioned that the muon is the only second generation particle for which a precision EDM experiment is feasible [26]. Since CP violation is associated with the second and third generation of quarks only, the muon may have a unique window for new physics in the lepton sector. Therefore, even if there were an EDM observed in another system, a measurement on the muon would be extremely important to understand the nature of the effect [27].

The Muon g-2 Experiment, E821, now being conducted at BNL, has been designed to probe physics beyond the standard model [25]. This includes supersymmetry with large $\tan\beta$ [28,29,30,31,32] where the muon EDM also has sensitivity. The experiments complement each other, because the magnetic anomaly and the EDM are related to each other as real and imaginary parts of the same physical quantity [33]. The recent new limit on the muon magnetic anomaly [34] corresponds (scaling by e/m_μ and assuming the natural CP-violating phase to be of order 1) to a dipole moment of order $5 \times 10^{-22}\,\mathrm{e \cdot cm}$ [35], which is well within the reach of this experiment, and demonstrates, how the explored parameter space can be expanded.

2 Experimental Overview

The muon spin precession angular frequency (relative to the momentum vector) in the presence of both electric and magnetic fields is given by:

$$\vec{\omega} = -\frac{e}{m}\{a\vec{B} + (\frac{1}{\gamma^2-1} - a)\frac{\vec{\beta}\times\vec{E}}{c} + \frac{\eta}{2}(\frac{\vec{E}}{c} + \vec{\beta}\times\vec{B})\}, \tag{1}$$

(assuming the muon velocity is orthogonal to the external magnetic and electric fields $\vec{\beta}\cdot\vec{B} = \vec{\beta}\cdot\vec{E} = 0$) where $a = (g-2)/2$ and η is the EDM in units of $\frac{e\hbar}{4mc}$. η plays a role for the EDM corresponding to the g factor for the magnetic dipole moment. The muon EDM couples to the external magnetic field because in the muon rest frame it looks like an electric field due to the Lorentz transformation. The EDM value in MKS units is given by

$$d_\mu = \frac{\eta}{2}\frac{e\hbar}{2mc} \simeq \eta \times 4.7 \times 10^{-14}\,\mathrm{e \cdot cm}. \tag{2}$$

From the above equation (1) is apparent why the present $g-2$ experiment uses muons at the "magic" γ, i.e. $\gamma = 29.3$ since at this value the coefficient $\frac{1}{\gamma^2-1} - a = 0$. and the muon spin precession becomes independent of the electric field present in the lab frame. For the dedicated EDM experiment we propose to use muons with much lower energy as well as a radial electric field

which cancels the g-2 precession leaving the EDM precession to operate on its own and accumulate over many microseconds. It should be noted that the main component which causes the spin to precess vertically in the muon rest frame is the dipole magnetic field which is partially transformed into a radial electric field in the muon rest frame. The electric field in the lab required to cancel the g-2 precession is

$$E = \frac{aBc(\gamma^2 - 1)}{\beta} = 2\,\mathrm{MV/m}, \tag{3}$$

for $\gamma = 5$, $B = 0.24\,\mathrm{T}$ and a magnet radius of 711 cm. Concentric cylindrical plates 10 cm apart with ± 100 KV voltage will satisfy this condition.

From equation (1) (at the muon "magic" momentum) it is apparent that the EDM influence on the spin precession is two-fold: 1) The spin precesses about an axis which is not exactly parallel to the magnetic field but is at an angle $\delta = \tan^{-1} \frac{\eta\beta}{2a}$. The maximum excursion of the muon spin from the horizontal plane, due to an EDM, occurs when the spin is at 90° with respect to the momentum vector. When the spin and momentum vectors are aligned there is no excursion from the horizontal plane. 2) The spin precession frequency is increased by a factor of $\sqrt{(1+\delta^2)}$.

Both of the above methods were used in the last CERN muon g-2 experiment to set a limit on the EDM[19]. They searched for an up down asymmetry in the counting rate with a detector split on the vertical mid-plane. The presence of an EDM induces a difference between the counting rate of the two parts of the split detector at the anomalous spin precession frequency. The reported limit is $3.7 \pm 3.4 \times 10^{-19}\,\mathrm{e \cdot cm}$. The error is the combined result of the statistical and systematic errors:

- Statistical: $\pm 2.7 \times 10^{-19}\,\mathrm{e \cdot cm}$
- Systematic: $\pm 2 \times 10^{-19}\,\mathrm{e \cdot cm}$

Both errors are at the same level. There are at least two sources of systematic errors when the spin is allowed to precess: 1) The center of the muon population is not exactly aligned with the geometric center of the detectors which results to an up-down modulation of the average decay positron position with the g-2 frequency. 2) As the muon spin precesses, the decay positrons travel through different magnetic and electric fields before they reach the detector which results in an up-down modulation of the average decay positron position with the g-2 frequency.

We propose to use a radial electric field to cancel the $g-2$ precession. This together with other improvements will significantly reduce many systematic

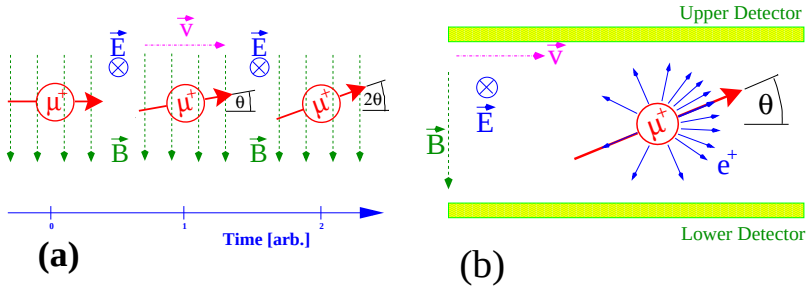

Figure 1: The basic principle of the proposed experiment. (a) Relativistic muons (μ^+) of velocity $\vec{v}$ moving in a magnetic storage ring with field ($\vec{B}$) find themselves exposed to a motional electric field $\vec{E} \propto \vec{v} \times \vec{B}$. In case of a finite small EDM the muon spin precesses with a linear increase in precession angle θ in time about an axis which is directed radially. (b) Due to the spatial anisotropy in the decay $\mu \to e^+ + \nu_e + \overline{\nu_\mu}$ detectors above and below the storage region are expected to observe a time dependent change in the ratio of positron counting signals. The positron angular distribution is indicated by the density of arrows.

errors and improve the experimental sensitivity to a muon EDM. The muon spin direction will be "frozen" horizontally. In the presence of a non-zero EDM, the proposed radial E-field (i.e. the motional E-field in the muon rest frame due to the laboratory dipole B-field) will rotate the spin around an axis parallel to the E-field, thereby tipping the spin vertically. This results in an up-down asymmetry in the number of electrons which is growing linearly with time and this is the quantity which we will measure (see Fig. 1).

Other changes from the present $g-2$ experiment include:

1. Use *magnetic* focusing instead of electrostatic focusing as is used in the present g-2 ring. A 10 by 10 cm area is available for muon storage which will increase the number of stored muons substantially.

2. Eliminate on the average all, out of plane ("vertical"), electric fields from the system during normal data taking. Any radial magnetic field in the presence of compensating vertical electric field introduces a systematic limitation [36,37]. For example, in the g-2 ring, a net radial magnetic field of 10 ppm of the main field would produce a systematic error in the EDM of 1×10^{-21} e $\cdot$ cm. A vertical electric field can be used, as discussed later in this note, to calibrate the system sensitivity with high accuracy.

2.1 Storage Ring-Weak Magnetic Focusing

The g-2 ring magnet has been built to provide excellent field stability and homogeneity for precision measurements. For the EDM experiment the field homogeneity is of relatively little concern, but the stability of the magnetic field, specifically its direction, is relevant. It is relevant, however, only as a second order effect depending on the E-field homogeneity as a function of the average vertical position of the muon beam. Measurements of the minor field components were done with Hall probes to an accuracy of about 10 ppm. During data taking runs the maximum number of muons is stored if the beam is vertically centered with respect to the electrostatic quadrupoles. Current coils on the pole faces are used to compensate the static radial field average. From these measurements we know that the average radial field $< B_r >$ changes by 20 ± 10 ppm year to year which is more than adequate for an E-field directional homogeneity of $10\,\mu$rad/10cm. The E-field homogeneity can be easily studied by raising and lowering the beam by inducing a radial B-field and looking at the vertical muon spin precession as a function of the vertical beam position.

From the NMR measurements of the absolute field, we know that the variations in the magnetic field are dominated by changes in the vertical gap between the upper and lower pole pieces due to thermal expansion/contraction of the magnet steel including the super-bolts that hold the yoke pieces together. A uniform temperature rise leads to an increase of the air gap and thus a reduction of the magnetic field in the storage region but does not change the direction of the field. However, the thermal time constant of the yoke is several hours, and changes in the ambient temperature do not only change the average vertical gap but also cause a transient relative tilt of the top pole with respect to the bottom. This affects the direction of the magnetic field, introducing a small radial field component, as well as the normal quadrupole moment, i.e. the gradient of the vertical field along the radial direction. In a weak focusing magnet we can use NMR probes to keep track of the radial field change by precisely measuring the normal quadrupole moment. These measurements should be compared to direct measurements of the gap variation using optical interferometry. During the first g-2 run in 1997 data were taken in a constant current mode and the ambient temperature changes are clearly visible in the average field. This change is highly correlated with the temperature difference between the magnet yoke surface temperature and the ambient temperature. Since 1997 the magnet yoke has been insulated and the temperature effects are reduced by about an order of magnitude, but the radial field component could still change by a few hundred nanoradians over a day which is tolerable. With further improvements in the temperature stability, this change will be

even smaller.

Most of the pulsed NMR equipment for g-2 could be used in the EDM experiment. Only the passive probes and the pulse amplifiers have a narrow bandwidth and would have to be replaced.

For the B-field there is a strong dependence due to the attractive magnetic force. At the g-2 field of 1.45 Tesla the average gap is reduced by 0.3 mm relative to the zero field value and the top pole rotates by about 0.3 mrad with respect to the bottom pole during the ramp. This translates into a tilt change of about 1.0 μrad or a change in the radial field component in the mid-plane by 0.5 ppm while going from (e.g.) 0.218 T to 0.233 T . Again this change can be monitored accurately with NMR probes and also with optical interferometers. Using both methods would give additional information on field perturbations due to permeability changes which are expected to be small at these low field values.

There is a need to have a kicker in order to be able to inject muons into the ring. One third in length of the current kicker with two thirds the peak current would suffice. The eddy currents of this kicker would be sufficiently low not to become a source of systematic errors.

2.2 Detectors

We require a detector system which is sensitive to the number of muon decay electrons going upward compared to the number going downward, in an energy range of 100 to 500 MeV. The up-down asymmetry, $\frac{N_{up}-N_{dn}}{N_{up}+N_{dn}}$, is directly proportional to η and the EDM. The detector should be relatively insensitive to background from muons, neutrons, pions, protons, etc.

The detectors will also have to be capable of handling the extremely high instantaneous rates immediately following muon injection, and the efficiency for measuring the up-down asymmetry must remain stable when the rate diminishes as the muons decay.

We anticipate that 10^7 muons will be stored per AGS bunch, significantly more than, for example, what the muon g-2 experiment currently receives. There will be 12 bunches, separated by about $33ms$, as in the g-2 experiment.

The proposed system consists of 2 cm thick scintillating lead-glass slabs placed above and below and on the sides of the storage region, with photodiode readout. The radiation length is about 1.5 cm. The electrons, on average, enter the lead-glass at large angles with respect to the normal to the detector surface. Simulations show that the rms energy resolution for 400 MeV electrons is about 14% due to shower fluctuations and losses. Photon statistics will increase this; for regular lead-glass, the resolution will increase to about 25%, less if

scintillating lead-glass is used. About 60% of the electrons above 100 MeV fall into the main shower peak, with the rest falling in a low-energy tail. On average, the showering electrons will leave much more energy than, say, muons which are lost from storage or gamma rays from neutron capture, thereby minimizing background sensitivity.

The lead-glass slabs would cover the top and bottom areas of the pole tips, and will go around the 45 m circumference of the ring minus 4 m for the required gaps. It will be segmented in 10 cm sections, each section being read out by a photodiode. This provides an overall segmentation of about 800.

The photodiodes will have time constants of about 1 μs. At the high anticipated rates, individual counting of decay electrons will not be attempted. Instead, we will integrate the total charge accumulated in approximately 1 μs intervals, as a function of time after injection. The charge will be calibrated to the number of decay electrons, and the up-down ratio as a function of time after injection will be deduced.

Individual electron counting is impractical at early times because the time spacing between events is too small. Consequently, we plan to integrate the total charge from the detectors. This implies that the gains of the detectors must be known very well. The geometric arrangement of the counters will be up-down symmetric so as to minimize up-down asymmetries arising from backgrounds.

The measurements will be taken for about ten muon lifetimes after injection, or for about 110 microseconds, however, most of the data will be collected in the first 55 μs. The gains of the photodiodes must be extremely good over 55 μs: to about 1 part in 10^5 or known to that level. We have outlined two approaches to achieve this: 1) We are working with the Instrumentation Division of BNL at BNL to develop such an ultra-stable system. Their first analysis indicates that one can stabilize the gains to 1 part in 10^4 and then calibrate the gain to 10%, thus providing the needed 1 part in 10^5 stability. 2) We will calibrate the system in situ by observing the muon spin precession. The resulting waveform should be an ideal sine-wave multiplied by an exponential decay. Any discrepancy from this ideal waveform can be assigned to gain changes and corrected for.

3 Sensitivity Level

The EDM sensitivity is given by (in MKS units)

$$\eta = \frac{2\theta_t}{\beta B t}\frac{m}{e}, \tag{4}$$

with θ_t the minimum vertical spin precession angle which can be detected, m, e the muon mass and charge respectively, and B, the average magnetic field seen by the muon. The uncertainty in η is

$$\sigma_\eta = \frac{1}{\gamma \tau_0 A_1 A \sqrt{2N_{Tot}}}, \tag{5}$$

with $A_1 = \beta e B/2m = 10^8/\mathrm{s}$ for $B = 0.24\mathrm{T}$, N_{Tot} the total number of observed decays, τ_0 the muon lifetime at rest, γ the Lorentz boost factor, and A the asymmetry. If one observes 1.5×10^{15} decay electrons which have an average transverse asymmetry of 0.3 then the uncertainty in η is 5.5×10^{-11}, and on the EDM 2.5×10^{-24} e $\cdot$ cm. For two muon lifetimes (i.e. $2 \times 11 \mu$s) this corresponds to a vertical precession angle of 120 nrad.

The sensitivity of the experiment increases as the B field and the lifetime increase. However, the necessary electric field required to cancel the muon $g-2$ spin precession also grows fast as can be seen by equation (3).

3.1 Calibration of Sensitivity

A simple way to calibrate the experimental sensitivity to the muon EDM is to apply a vertical electric field in the muon storage region. The beam will be displaced vertically until the magnetic focusing will compensate with an equal and opposite force. The average radial magnetic field seen by the muons will be such that it compensates the vertical electric field. This non-zero radial magnetic field will induce a non-zero spin precession in the vertical plane mimicking an EDM effect.

The vertical spin precession angle with an out of plane ("vertical") electric field E_v, and a vertical B magnetic field present is given by

$$\theta_t = \frac{e}{2m}[g\frac{E_v}{c\beta\gamma^2} + \eta\beta B]t, \tag{6}$$

which for an average $E_v = 5$ KV/m (averaged over the circumference) results in 30 mrad vertical spin precession which is easily measurable. This average electric field can be achieved by placing pulsed 25 KV on a pair of electrodes, 10 cm apart, covering 2% of the ring.

It should be noted that in the absence of an electric field the average radial magnetic field seen by the muons is exactly zero since we are using *magnetic* focusing.

4 Systematic Errors

Potential systematic errors include the following:

1. Early to late electron counting (rate) effects. With almost 10^7 muons entering the ring and a good fraction of them decaying within $10\,\mu s$ the rates are very high. Our detector will be scintillating lead-glass calorimeters with photodiode readout. The readout electronics will be specially made so that they maintain their linearity to 10^{-4} and will be measured [38] to 10%. With 800 such systems the error is further reduced another factor of 30. We are investigating the possibility of interchanging electronically the top/bottom detector readout randomly about 100 times (in the course of the experiment) which brings us to 3×10^{-8} linearity error in the electronics.

   Alternatively we will calibrate the system in situ by measuring the muon spin precession (without applying the radial E-field). The resulting waveform should be an ideal sine-wave multiplied by an exponential decay. Any discrepancy from this ideal waveform can be assigned to gain changes and corrected for.

2. Proton or pion contamination of the muon beam. During the 1997 run of the g-2 experiment about 10^8 pions per spill were injected, the pion flash was the biggest problem. After striking a nucleus hadrons produce secondary neutrons which in turn produce gammas paralyzing the photomultipliers mostly at the first half of the ring for tens of μs. When we moved to muon injection by lowering the accepted particle momentum by about 1.5% the light flash went down by a factor of 50.

   In the muon EDM experiment the secondary beam is 900 MeV/c whereas the muons have about 520 MeV/c. One can expect a proton and pion leakage of less than 10^{-4} per muon. It is therefore the lost muons (assuming 50% storage efficiency) which will dominate the flash. Their efficiency (μ^+ case) of producing neutrons is down by approximately a factor of $\alpha \approx 1/137$ relative to those produced by pions/protons. We plan to study this effect with the kicker off and observe its time dependence and up/down asymmetry. This effect is still under study.

3. Muon losses as a function of time. If there are muon losses at an appreciable level and they are lost in a non-uniform way, they could provide a false signal. We are studying the potential level of this effect and ways to minimize it (e.g. scraping, under-filling the vertical and horizontal acceptance of the ring, etc.).

4. Stored positrons. Positrons from the beamline with the same momentum as muons will be stored in the ring and will synchrotron radiate their energy at a rate of 0.8 KeV per revolution. For 0.5% momentum acceptance

of the ring, it will take approximately 1 ms before all positrons reach the inner aperture whereas almost all the muons decay within 50 μs. We are studying the potential problems and possible uses of the stored positrons.

5. Due to the cylindrical nature of the electrostatic plates which provide the radial electric field, the E-field decreases as $1/R$ making the cancelation of the g-2 imperfect as a function of the muon momentum. Also, taking into account that the spin precession cancelation depends on both the magnetic field and the value of gamma (see equation (3)), one can estimate that at the edge of the aperture, the muon spins will flip horizontally in 100 μs. Only a very small fraction of the muons will do that. We are investigating the requirement on the acceptance and detector efficiency uniformity so that this effect is also negligible. At any rate this error will be known by letting the muon spin precess and observing the precession plane as a function of the E-field.

6. The problem with radial B-fields when using electrostatic focusing is eliminated completely because we use only magnetic focusing. However the misalignment and time stability of the E and (with much less concern) B-fields will be monitored by the inclinometer and the laser interferometers described in the next section.

7. Horizontal and Vertical coupling of the betatron oscillations. Yuri Orlov is studying this effect.

8. The "vertical" component of the E-field, i.e. the out of plane component of the E-field should be known to $\pm 10^{-8}$ of E for $1 \times 10^{-24}\,\mathrm{e} \cdot \mathrm{cm}$ limit. This is addressed below.

We feel confident that we can analyze all sources of systematic errors and greatly reduce them due to the flexibility provided by a dedicated muon EDM experiment.

4.1 Electrode alignment

The vertical component of the electrostatic field in the muon storage region, averaged over the ring circumference, must be well suppressed. An average component of 10 nrad will induce an effect mimicking an EDM of $10^{-24}\,\mathrm{e} \cdot \mathrm{cm}$. This implies that the electrodes, and the resistive top and bottom plates used to produce a uniform electrostatic field, must be aligned with respect to a plane with high precision.

Fig. 2 shows a method that may be used to achieve this alignment and, most importantly, the monitoring of the relative distance to better than 10 nrad. The electrodes and top and bottom plates are clamped at intervals with pairs of U-shaped machinable ceramic yokes. The top and bottom plates are made of glass doped to produce a small but uniform conductivity bonded to insulating webbing for support. The outer surfaces of the conductive glass are covered with an anti-reflection coating so that the parallelism of the inner surfaces of the top and bottom plates may be tested, after clamping, by optical interferometry. Shimming may be necessary to insure that these inner surfaces are parallel. We are investigating the possibility of constructing the plates of scintillating lead glass to be an almost full acceptance detector for the decay positrons. The cross section of the plates (10 cm by 10 cm) is shown on the right. The top and bottom plates consist of conductive glass plates. On the top of the figure the laser interferometer is shown which has 5 nm relative position resolution and 33 KHz response speed. Integrating over 3 ms will result to 5 nrad angular resolution [39].

The Inclinometer technique with Deuteron Polarimeter is described in the Spring 2000 version of the Letter of Intent [1]. It turns out that Deuterons are much more sensitive to the out of plane component of the E-field than muons are. The amazing coincidence is that although the muon and deuteron anomalous magnetic moment (a) and γ differ by orders of magnitude, the B-field required for storage is the same to 0.015T for $\mid E \mid = 2$MV/m and R = 7.11m (the muon g-2 ring radius).

5 Summary

We are proposing to search for an EDM of the muon by performing a dedicated experiment in the existing g-2 ring. The main differences from the g-2 experiment are that we are going to place the detector calorimeters inside the vacuum chambers, use magnetic focusing (start with weak and continue with strong later on) with no vertical electric fields present, lower momentum muons, and a lithium lens target with modified beam transport and inflector system. The introduction of an inclinometer, i.e. a system of measuring in situ the out of plane component of the average radial electric field direction (which is used to cancel the spin motion of the muon). This is done by injecting polarized deuterons in the ring and observe their vertical spin precession as a function of time. Finally, the introduction of a monitoring system of the above alignment of the electric and magnetic field directions by a set of laser interferometers in between the deuteron runs.

The estimated sensitivity is at the level of $10^{-24}\,\mathrm{e}\cdot\mathrm{cm}$, an improvement

of a factor of almost 10^5 to 10^6 over the last CERN muon g-2 experiment, with comparable improvement on the systematic errors. This technique can may use of much more intense polarized muon sources which will make it much easier to study the systematics and push them further down to their limits.

References

1. Y.K. Semertzidis *et al.*, Letter of Intent to BNL (Spring of 2000, and Fall of 1997)
2. Y.K. Semertzidis, in: Frontier Tests of Quantum Electrodynamics and Physics of the Vacuum E. Zavattini, D. Bakalov and C. Rizzo (eds.), p. 369 (1998)
3. W. Bernreuther and A. Suzuki, Review of Modern Physics **63**, 313 (1991)
4. D. Chang, W.Y. Keung and A. Pilaftsis, Phys. Rev. Lett. **82**, 900 (1999); A. Pilaftsis, Phys.Rev. **D58**, 96010 (1998)
5. C.G. Geng and J.N. Ng, Phys. Rev. **D 42**, 1509 (1990)
6. V. Barger, A. Das, C. Kao, Phys. Rev. **D 55**, 7099 (1997)
7. D. Bowser-Chao, D. Chang, W. Keung, Phys. Rev. Lett. **79**, 1988 (1997)
8. W. Molzon *et al.*, MECO Proposal to the Brookhaven National Laboratory (1998)
9. T. Mori *et al.*, Proposal R-99-05 to Paul Scherrer Institut, Villigen, Switzerland (1999)
10. R.M. Carey *et al.*, Phys. Rev. Lett. **82**, 1632 (1999)
11. C.Caso *et al.*, Eur. Phys. Jour. **C3**, 1 (1998)
12. S.M. Barr and W. Marciano, in CP Violation, ed. C. Jarlskog, World Scientific, Singapore (1989)
13. I.B. Khriplovich and M. Pospelov, Nucl. Phys. **B 420**, 505 (1994); F. Hoogevenn, Nucl. Phys. **B341**, 322 (1990); I.B. Khriplovich, Phys. Lett. **B 173**, 193 (1986)
14. N. Ramsey, at "Breit Symposium", Yale (1999)
15. P.G.H Sandars, Phys. Rev. Lett., **19**, 1396 (1967)
16. S. Dimopoulos and L.J. Hall, Phys. Lett. **B344** (1995)
17. R.Barbieri, A. Romanino and A. Strumia, Phys. Lett. **369**, 283 (1996)
18. E.D. Commins *et al.*, Phys.Rev. A**50**, 2960 (1994); see also E.A. Hinds and B.E. Sauer, Physics World **10**, 37 (1997)

19. J. Bailey *et al.*, Nucl. Phys. **B150**, 1 (1979); F.J.M. Farley and E. Picasso, in Quantum Electrodynamics, ed. T. Kinoshita, World Scientific, Singapore p. 479 (1990)
20. M. Aciari, *et al.*, Phys. Lett. **B** , (1998)
21. D. Cho et al. Phys. Rev. Lett. **63**, 2559 (1989); see also: H.M. Quiney *et al.*, Phys.Rev. A **57**, 920 (1998)
22. P.G. Harris *et al.*, Phys. Rev. Lett. **82**, 904 (1999); see also: S.K. Lamoreaux and R. Golub, Phys. Rev. **D 61**, 051301 (2000)
23. L.I. Schiff, Phys.Rev. **132**, 2194 (1963)
24. P.G.H. Sandars, Workshop on Nuclear electric Dipole Moment Searches, GSI, Darmstadt (1999)
25. V.W. Hughes, W.M. Morse, B.L. Roberts *et al.*, AGS Experiment E821 at the Brookhaven National Laboratory, Design Report (1995)
26. A. Pilaftsis, Workshop on Nuclear electric Dipole Moment Searches, GSI, Darmstadt (1999)
27. K.S. Babu *et al.*, Phys. Rev. **D59**, 016004 (1998)
28. T. Ibrahim and P. Nath, hep-ph/9907555
29. U. Chattopadhaya and P. Nath, Phys. Rev. **D53**, 1648 (1996)
30. T. Moroi. Phys. Rev. **D53**, 6565 (1996)
31. D. Hertzog *et al.*, in Particles Strings and Cosmology, ed. P. Nath, World Scientific, p. 168 (1999)
32. T. Kinoshita and W.J. Marciano, in Quantum Electrodynamics, ed.T. Kinoshita, World Scientific, Singapore, p. 419 (1990)
33. W. Marciano, HIMUS Workshop, Tsukuba (1999)
34. B.L. Roberts, Lepton Photon conference 1999 (hep-ex/0002005)
35. W. Marciano, Lepton Moments Workshop, Heidelberg (1999)
36. Yuri Orlov, "Spin and Beam Dynamics I", muon g-2 note #279
37. J. Miller, R. Carey, and E. Hawk, "Measurement of the Muon Electric Dipole Moment in E821", muon g-2 note #215
38. V. Radeka, private communication
39. Specs provided by Agilent Technology (HP subsidiary) for their system

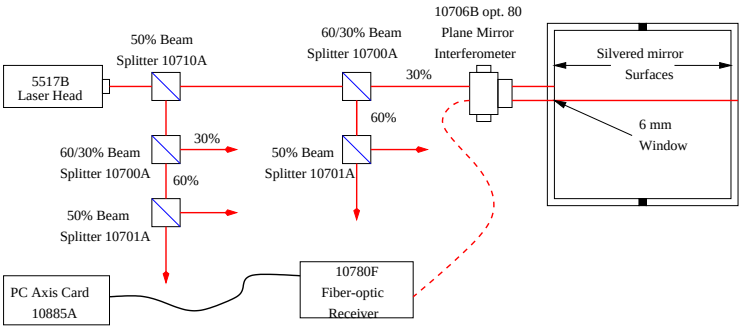

6 Axis per Laser Head

The plane mirror interferometers 10706B will measure the change in spacing of the 2 silvered surfaces. The detailed optical layout for all 40 measurement axis is done by the integrater. Other optical components such as Beam Benders 10707A and Adjustable Mounts, 10710A & 10711A, are available to aid in layout and alignment.

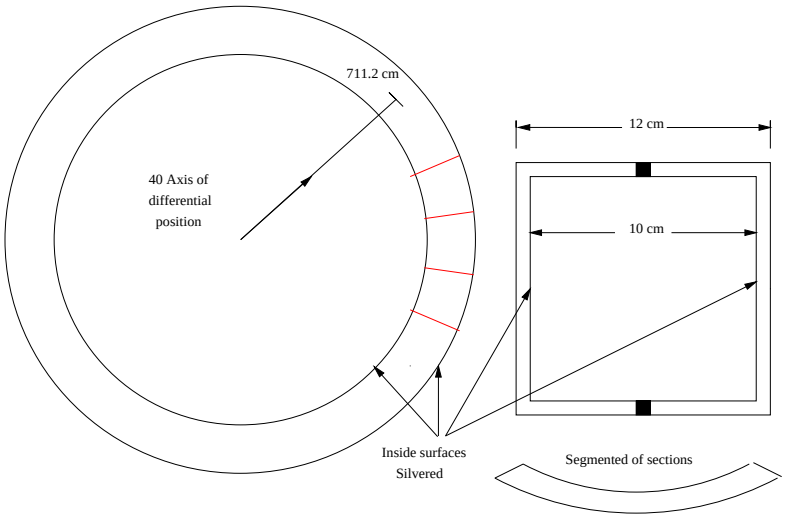

Figure 2: The cross section of the plates (10 cm by 10 cm) which will also serve as the decay positron detectors, is shown on the right. The top and bottom plates consist of conductive glass plates. On the top of the figure the laser interferometer is shown which has 5 nm relative position resolution with 33 KHz response speed.