**Engineering Letters, 13:2, EL_13_2_7 (Advance online publication: 4 August 2006)**

# Intelligent Control of an Autonomous Mobile Robot using Type-2 Fuzzy Logic

Leslie Astudillo, Oscar Castillo, Patricia Melin, Arnulfo Alanis, Jose Soria, Luis T. Aguilar

***Abstract*— We develop a tracking controller for the dynamic model of unicycle mobile robot by integrating a kinematic controller and a torque controller based on Fuzzy Logic Theory. Computer simulations are presented confirming the performance of the tracking controller and its application to different navigation problems.**

***Index Terms*—Intelligent Control, Type-2 Fuzzy Logic, Mobile Robots.**

## I. Introduction

Mobile robots are nonholonomic systems due to the constraints imposed on their kinematics. The equations describing the constraints cannot be integrated simbolically to obtain explicit relationships between robot positions in local and global coordinate's frames. Hence, control problems involve them have attracted attention in the control community in the last years [11].

Different methods have been applied to solve motion control problems. Kanayama et al. [10] propose a stable tracking control method for a nonholonomic vehicle using a Lyapunov function. Lee et al. [12] solved tracking control using backstepping and in [13] with saturation constraints. Furthermore, most reported designs rely on intelligent control approaches such as Fuzzy Logic Control [1][8][14][17][18][20] and Neural Networks [6][19].

However the majority of the publications mentioned above, has concentrated on kinematics models of mobile robots, which are controlled by the velocity input, while less attention has been paid to the control problems of nonholonomic dynamic systems, where forces and torques are the true inputs: Bloch and Drakunov [2] and Chwa [4], used a sliding mode control to the tracking control problem. Fierro and Lewis [5] propose a dynamical extension that makes possible the integration of kinematic and torque controller for a nonholonomic mobile robot. Fukao et al. [7], introduced an adaptive tracking controller for the dynamic model of mobile robot with unknown parameters using backstepping.

In this paper we present a tracking controller for the dynamic model of a unicycle mobile robot, using a control law such that the mobile robot velocities reach the given velocity inputs, and a fuzzy logic controller such that provided the required torques for the actual mobile robot. The rest of this paper is organized as follows. Sections II and III describe the formulation problem, which include: the kinematic and dynamic model of the unicycle mobile robot and introduces the tracking controller. Section IV illustrates the simulation results using the tracking controller. The section V gives the conclusions.

## II. Problem formulation

### A. The Mobile Robot

The model considered is a unicycle mobile robot (see Fig. 1), it consist of two driving wheels mounted on the same axis and a front free wheel [3].

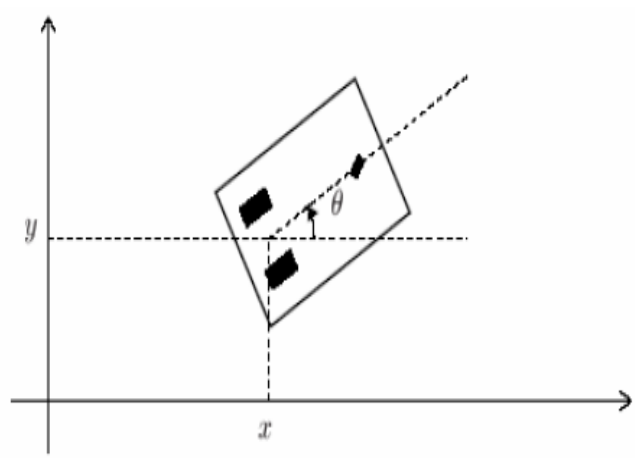


**Fig. 1.** Wheeled mobile robot.

The motion can be described with equation (1) of movement in a plane [5]:

Manuscript received December 15, 2005 qnd accepted on April 5, 2006. This work was supported in part by the Research Council of DGEST under Grant 493.05-P. The students also were supported by CONACYT with scholarships for their graduate studies.

Oscar Castillo is with the Division of Graduate Studies and Research in Tijuana Institute of Technology, Mexico (corresponding author phone: 52664-623-6318; fax: 52664-623-6318; e-mail: ocastillo@tectijuana.mx).

Patricia Melin is with the Division of Graduate Studies and Research in Tijuana Institute of Technology, Mexico (e-mail: harias@tectijuana.mx).

Arnulfo Alanis is with the Division of Graduate Studies and Research in Tijuana Institute of Technology, Mexico (e-mail: pmelin@tectijuana.mx)

Leslie Astudillo is a graduate student in Computer Science with the Division of Graduate Studies and Research in Tijuana Institute of Technology, Mexico (e-mail: pmelin@tectijuana.mx)

Jose Soria is a with the Division of Graduate Studies and Research in Tijuana Institute of Technology, Mexico (e-mail: jsoria@ucsd.edu).

Luis Aguilar is with CITEDI-IPN Tijuana, Mexico (e-mail: laguilar@citedi.mx)

$$\dot{q} = \begin{vmatrix} \cos\theta & 0 \\ \sin\theta & 0 \\ 0 & 1 \end{vmatrix} \begin{vmatrix} v \\ w \end{vmatrix}$$

$$M(q)\dot{v} + V(q,\dot{q})v + G(q) = \tau \qquad (1)$$

Where $q = [x, y, \theta]^T$ is the vector of generalized coordinates which describes the robot position, *(x,y)* are the cartesian coordinates, which denote the mobile center of mass and $\theta$ is the angle between the heading direction and the *x*-axis (which is taken counterclockwise form); $v = [v, w]^T$ is the vector of velocities, *v* and *w* are the linear and angular velocities respectively; $\tau \in R^r$ is the input vector, $M(q) \in R^{nxn}$ is a symmetric and positive-definite inertia matrix, $V(q,\dot{q}) \in R^{nxn}$ is the centripetal and Coriolis matrix, $G(q) \in R^n$ is the gravitational vector. Equation (1.a) represents the kinematics or steering system of a mobile robot. Notice that the no-slip condition imposed a non-holonomic constraint described by (2), that it means that the mobile robot can only move in the direction normal to the axis of the driving wheels.

$$\dot{y}\cos\theta - \dot{x}\sin\theta = 0 \qquad (2)$$

### B. *Tracking Controller of Mobile Robot*

Our control objective is established as follows: Given a desired trajectory $q_d(t)$ and orientation of mobile robot we must design a controller that apply adequate torque τ such that the measured positions *q(t)* achieve the desired reference $q_d(t)$ represented as (3):

$$\lim_{t\to\infty} \| q_d(t) - q(t) \| = 0 \qquad (3)$$

To reach the control objective, we are based in the procedure of [5], we deriving a *τ(t)* of a specific $v_c(t)$ that controls the steering system (1.a) using a Fuzzy Logic Controller (FLC). A general structure of tracking control system is presented in the Fig. 2.

## III. Control of the Kinematic Model

We are based on the procedure proposed by Kanayama et al. [10] and Nelson et al. [15] to solve the tracking problem for the kinematic model, this is denoted as $v_c(t)$. Suppose the desired trajectory $q_d$ satisfies (4):

$$\dot{q}_d = \begin{vmatrix} \cos\theta_d & 0 \\ \sin\theta_d & 0 \\ 0 & 1 \end{vmatrix} \begin{vmatrix} v_d \\ w_d \end{vmatrix} \qquad (4)$$

Using the robot local frame (the moving coordinate system x-y in figure 1), the error coordinates can be defined as (5):

$$e = T_e(q_d - q), \begin{vmatrix} e_x \\ e_y \\ e_\theta \end{vmatrix} = \begin{vmatrix} \cos\theta & \sin\theta & 0 \\ -\sin\theta & \cos\theta & 0 \\ 0 & 0 & 1 \end{vmatrix} \begin{vmatrix} x_d - x \\ y_d - y \\ \theta_d - \theta \end{vmatrix} \qquad (5)$$

And the auxiliary velocity control input that achieves tracking for (1.a) is given by (6):

$$v_c = f_c(e, v_d), \begin{vmatrix} v_c \\ w_c \end{vmatrix} = \begin{vmatrix} v_d + \cos e_\theta + k_1 e_x \\ w_d + v_d k_2 e_y + v_d k_3 \sin e_\theta \end{vmatrix} \qquad (6)$$

Where $k_1$, $k_2$ and $k_3$ are positive constants.

## IV. Fuzzy Logic Controller

The purpose of the Fuzzy Logic Controller (FLC) is to find a control input *τ* such that the current velocity vector *v* to reach the velocity vector $v_c$ this is denoted as (7):

$$\lim_{t\to\infty} \| v_c - v \| = 0 \qquad (7)$$

As is shown in Fig. 2, basically the FLC have 2 inputs variables corresponding the velocity errors obtained of (7) (denoted as $e_v$ and $e_w$: linear and angular velocity errors respectively), and 2 outputs variables, the driving and rotational input torques τ (denoted by *F* and *N* respectively). The membership functions (MF)[9] are defined by 1 triangular and 2 trapezoidal functions for each variable involved due to the fact are easy to implement computationally.

Fig. 3 and Fig. 4 depicts the MFs in which N, C, P represent the fuzzy sets [9] (Negative, Zero and Positive respectively) associated to each input and output variable, where the universe of discourse is normalized into [-1,1] range.

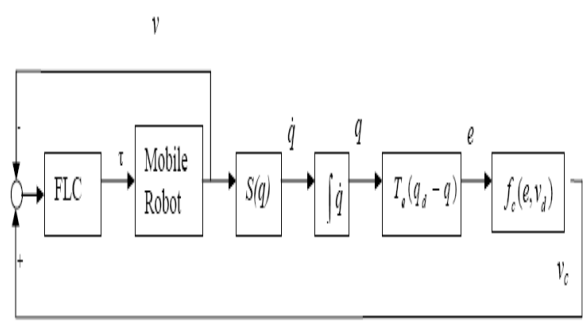


**Fig. 2.** Tracking control structure

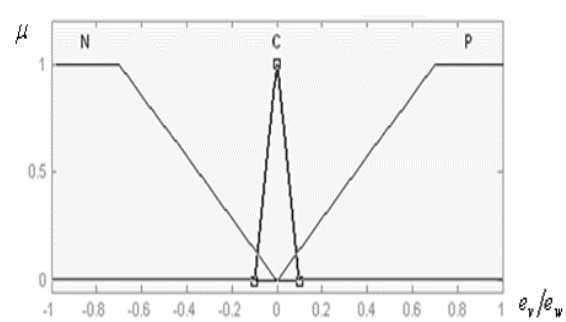


**Fig. 3.** Membership function of the input variables $e_v$ and $e_w$

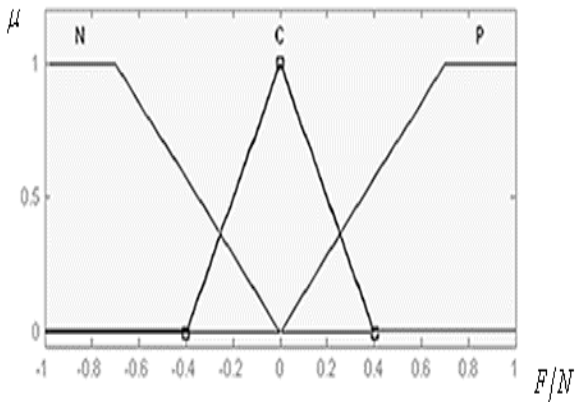


**Fig. 4.** Membership functions of the output variables F and N.

The rule set of FLC contain 9 rules which governing the input-output relationship of the FLC and this adopts the Mamdani-style inference engine [16], and we use the center of gravity method to realize defuzzification procedure. In Table I, we present the rule set whose format is established as follows:

Rule *i*: If $e_v$ is $G_1$ and $e_w$ is $G_2$ then F is $G_3$ and N is $G_4$

Where $G_1..G_4$ are the fuzzy set associated to each variable and *i*= 1 ... 9.

TABLE 1
FUZZY RULE SET

| $e_v / e_w$ | N | C | P |
|---|---|---|---|
| N | *N/N* | *N/C* | *N/P* |
| C | *C/N* | *C/C* | *C/P* |
| P | *P/N* | *P/C* | *P/P* |

In Table I, N means NEGATIVE, P means POSITIVE and C means ZERO.

## V. SIMULATION RESULTS

Simulations have been done in Matlab® to test the tracking controller of the mobile robot defined in (1). We consider the initial position $q(0) = (0, 0, 0)$ and initial velocity $v(0) = (0,0)$. From Fig. 5 to Fig. 8 we show the results of the simulation for the case 1. Position and orientation errors are depicted in the Fig. 5 and Fig. 6 respectively, as can be observed the errors are sufficient close to zero, the trajectory tracked (see Fig. 7) is very close to the desired, and the velocity errors shown in Fig. 8 decrease to zero, achieving the control objective in less than 1 second of the whole simulation. We show in Fig. 9 the Simulink block diagram to test the controller. We also show in Fig. 10 the tracking errors in the three variables. Finally, we show in Fig. 11 the evolution of the genetic algorithm that was used to find the optimal parameters for the fuzzy controller.

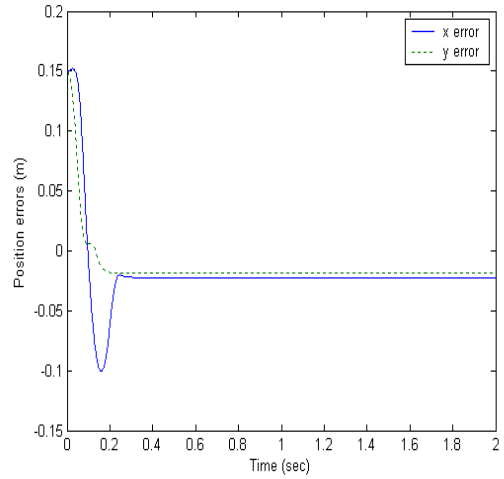


**Fig. 5.** Positions error with respect to the reference values. Solid: error in x, dotted: error in y.

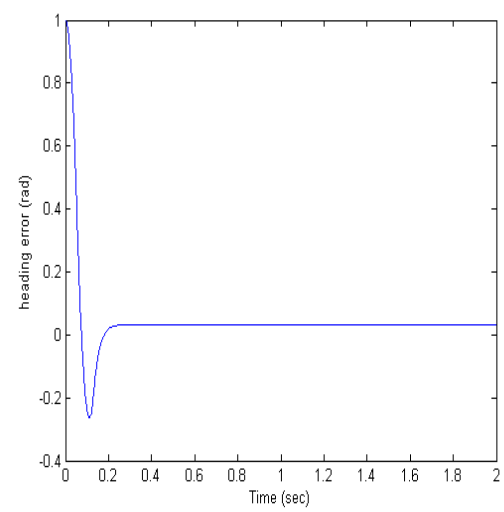


**Fig. 6.** Orientation error with respect to the reference values.

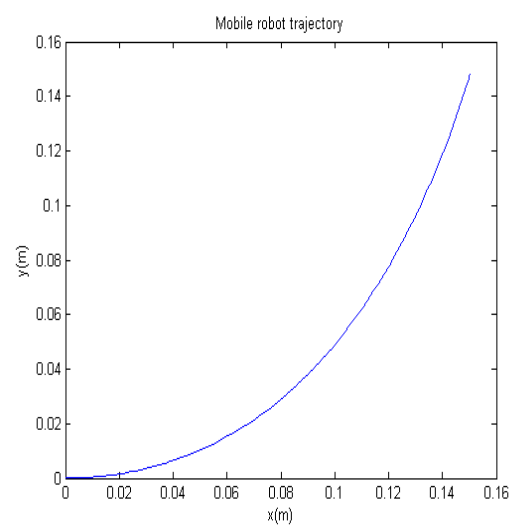


**Fig. 7.** Mobile Robot Trajectory.

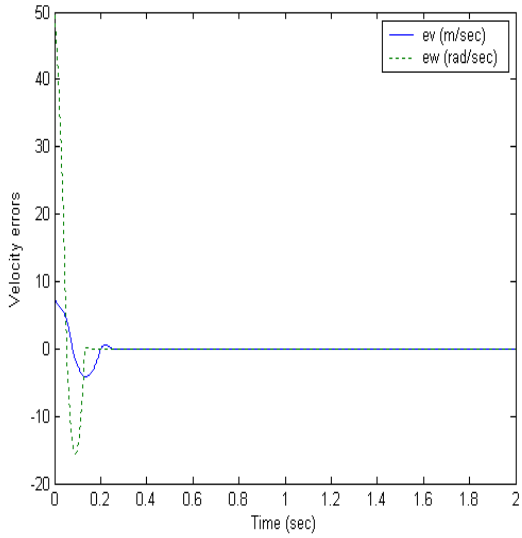


**Fig. 8.** Velocity errors: Solid: error in $e_v$, dotted: error in $e_w$

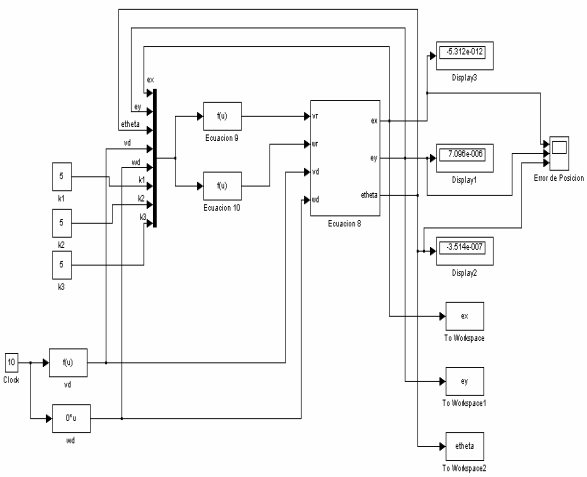


**Fig. 9** Simulink block diagram of the controller.

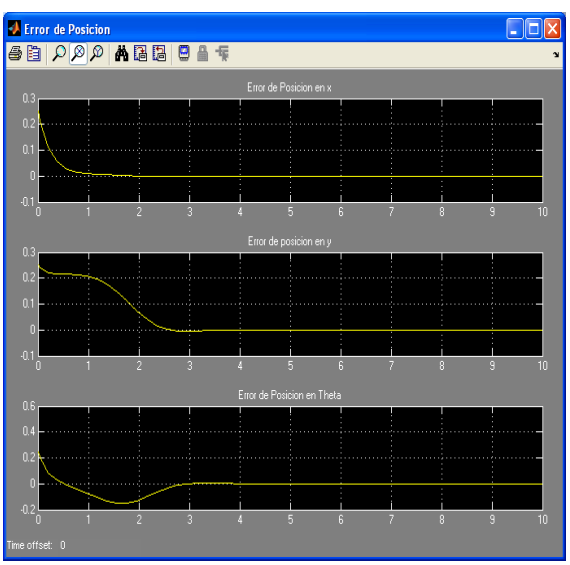


**Fig. 10** Tracking errors in the three variables.

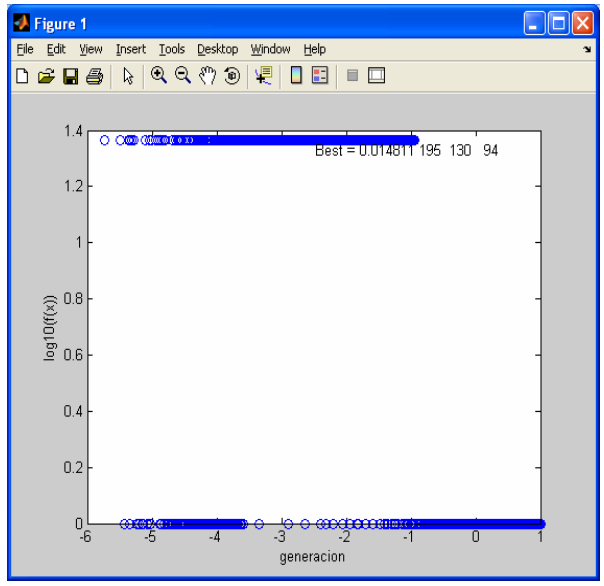


**Fig. 11** Evolution of GA for finding optimal Controller.

In Table II we show simulation results for 25 experiments with different conditions for the gains of the fuzzy controller. We can also appreciate from this table that different reference velocities and positions were considered.

TABLE II
SIMULATION RESULTS FOR DIFFERENT EXPERIMENTS WITH THE FUZZY CONTROLLER.

| No. | Controlador | Escala | Velocidades Iniciales | | e | | | | | Constantes | | |
|---|---|---|---|---|---|---|---|---|---|---|---|---|
| | | | vd | wd | ex | ey | etheta | ev | ew | k1 | k2 | k3 |
| 1 | 4 | [-100 100] | 0.25 – 0.25cos(2πt/5) | 0 | -0.435 | 2.36 | 2.79 | 0.0139 | 4.4 | 5 | 5 | 5 |
| 2 | 4 | [-100 100] | 0.25 – 0.25cos(2πt/5) | 0 | -0.339 | -0.0997 | -0.5 | -14 | -0.0773 | 45 | 70 | 45 |
| 3 | 4 | [-100 100] | 0.25 – 0.25cos(2πt/5) | 0 | -0.339 | -0.0996 | -0.5 | -32.9 | -0.0311 | 100 | 160 | 110 |
| 4 | 4 | [-100 100] | 0.1 | 0 | -0.323 | -0.106 | -4.491 | 0.232 | 0.4 | 5 | 5 | 5 |
| 5 | 4 | [-100 100] | 0.1 | 0 | -0.323 | -0.106 | -0.491 | 0.232 | 0.4 | 45 | 70 | 45 |
| 6 | 4 | [-100 100] | 0.1 | 0 | -0.329 | -0.104 | -0.498 | -30 | 0.328 | 100 | 160 | 110 |
| 7 | 4 | [-100 100] | 0.15 – 0.15cos(2πt/5) | 0 | -0.339 | -0.0997 | -0.5 | -0.6 | 0.0859 | 5 | 5 | 5 |
| 8 | 4 | [-100 100] | 0.15 – 0.15cos(2πt/5) | 0 | -0.314 | -0.112 | -0.494 | -10 | 0.627 | 45 | 70 | 45 |
| 9 | 4 | [-100 100] | 0.15 – 0.15cos(2πt/5) | 0 | -0.314 | -0.112 | -0.494 | -10 | 0.627 | 100 | 160 | 110 |
| 10 | 4 | [-100 100] | 0.5 | 0 | 1.24 | 1.16 | 1.25 | 5.33 | 5.32 | 5 | 5 | 5 |
| 11 | 4 | [-100 100] | 0.5 | 0 | -0.316 | -0.108 | -0.484 | -10.5 | -11.8 | 45 | 70 | 45 |
| 12 | 4 | [-100 100] | 0.5 | 0 | -0.336 | -0.101 | -0.449 | -31.5 | -33.6 | 100 | 160 | 110 |
| 13 | 5 | [-100 100] | 0.25 – 0.25cos(2πt/5) | 0 | -0.339 | -0.0995 | -0.5 | -0.818 | -0.000181 | 5 | 5 | 5 |
| 14 | 5 | [-100 100] | 0.25 – 0.25cos(2πt/5) | 0 | -0.339 | -0.0996 | -0.5 | -14.2 | 0.0325 | 45 | 70 | 45 |
| 15 | 5 | [-100 100] | 0.25 – 0.25cos(2πt/5) | 0 | -0.339 | -0.0995 | -0.5 | -33 | 0.00623 | 100 | 160 | 110 |
| 16 | 5 | [-100 100] | 0.1 | 0 | -0.333 | -0.102 | -0.496 | -0.185 | 0.185 | 5 | 5 | 5 |
| 17 | 5 | [-100 100] | 0.1 | 0 | 1.5 | -0.425 | 1.81 | 40.9 | 8.57 | 45 | 70 | 45 |
| 18 | 5 | [-100 100] | 0.1 | 0 | -0.338 | -0.1 | -0.499 | -32.1 | -6.57 | 100 | 160 | 110 |
| 19 | 5 | [-100 100] | 0.5 | 0 | -0.285 | -0.119 | -0.466 | 1.21 | -1.29E-14 | 5 | 5 | 5 |
| 20 | 5 | [-100 100] | 0.5 | 0 | -0.3 | -0.113 | -0.472 | -9 | -11 | 45 | 70 | 45 |
| 21 | 5 | [-100 100] | 0.5 | 0 | -0.318 | -0.107 | -0.485 | -28 | -31.9 | 100 | 160 | 110 |
| 13 | 1 | [-100 100] | 0.25 – 0.25cos(2πt/5) | 0 | -0.319 | -0.106 | -0.482 | 0.311 | 1.01 | 5 | 5 | 5 |
| 14 | 1 | [-100 100] | 0.25 – 0.25cos(2πt/5) | 0 | -0.327 | -0.104 | -0.491 | -12.9 | 0.694 | 45 | 70 | 45 |
| 15 | 1 | [-100 100] | 0.25 – 0.25cos(2πt/5) | 0 | -0.339 | -0.0997 | -0.5 | -32.8 | 0.0839 | 100 | 160 | 110 |
| 16 | 1 | [-100 100] | 0.1 | 0 | -0.241 | -0.127 | -0.419 | 2 | 1.94 | 5 | 5 | 5 |
| 17 | 1 | [-100 100] | 0.1 | 0 | -0.312 | -0.109 | -0.483 | -11.8 | -1.87 | 45 | 70 | 45 |
| 18 | 1 | [-100 100] | 0.1 | 0 | -0.321 | -0.108 | -0.494 | -29.3 | -6.32 | 100 | 160 | 110 |
| 19 | 1 | [-100 100] | 0.5 | 0 | 0.0567 | -0.17 | -0.226 | 6 | 2.76 | 5 | 5 | 5 |
| 20 | 1 | [-100 100] | 0.5 | 0 | -0.309 | -0.113 | -0.487 | -11.4 | -13.6 | 45 | 70 | 45 |
| 21 | 1 | [-100 100] | 0.5 | 0 | -0.29 | -0.118 | -0.473 | -25 | -32.5 | 100 | 160 | 110 |

## VI. CONCLUSIONS

We described the development of a tracking controller integrating a fuzzy logic controller for a unicycle mobile robot with known dynamics, which can be applied for both, point stabilization and trajectory tracking. Computer simulation results confirm that the controller can achieve our objective. As future work, several extensions can be made to the control structure of Fig. 2, such as to increase the tracking accuracy and the performance level.

## REFERENCES


[1] S. Bentalba, A. El Hajjaji, A. Rachid, Fuzzy Control of a Mobile Robot: A New Approach, Proc. IEEE Int. Conf. On Control Applications, Hartford, CT, pp 69-72, October 1997.

[2] A. M. Bloch, S. Drakunov, Tracking in NonHolonomic Dynamic System Via Sliding Modes, *Proc. IEEE Conf. On Decision & Control*, Brighton, UK, pp 1127-1132, 1991.

[3] G. Campion, G. Bastin, B. D'Andrea-Novel, Structural Properties and Classification of Kinematic and Dynamic Models of Wheeled Mobile Robots, IEEE Trans. On Robotics and Automation, Vol. 12, No. 1, February 1996.

[4] D. Chwa., Sliding-Mode Tracking Control of Nonholonomic Wheeled Mobile Robots in Polar coordinates, IEEE Trans. On Control Syst. Tech. Vol. 12, No. 4, pp 633-644, July 2004.

[5] R. Fierro and F.L. Lewis, Control of a Nonholonomic Mobile Robot: Backstepping Kinematics into Dynamics. *Proc. 34th Conf. on Decision & Control*, New Orleans, LA, 1995.

[6] R. Fierro, F.L. Lewis, Control of a Nonholonomic Mobile Robot Using Neural Networks, *IEEE Trans. On Neural Networks*, Vol. 9, No. 4, pp 589 – 600, July 1998.

[7] T. Fukao, H. Nakagawa, N. Adachi, Adaptive Tracking Control of a NonHolonomic Mobile Robot, *IEEE Trans. On Robotics and Automation*, Vol. 16, No. 5, pp. 609-615, October 2000.

[8] S. Ishikawa, A Method of Indoor Mobile Robot Navigation by Fuzzy Control, *Proc. Int. Conf. Intell. Robot. Syst.*, Osaka, Japan, pp 1013-1018, 1991.

[9] J. S. R. Jang, C.T. Sun, E. Mizutani, Neuro Fuzzy and Soft Computing: A Computational Approach to Learning and Machine Intelligence, Prentice Hall, Upper Sadle River, NJ, 1997.

[10] Y. Kanayama, Y. Kimura, F. Miyazaki T. Noguchi, A Stable Tracking Control Method For a Non-Holonomic Mobile Robot, *Proc. IEEE/RSJ Int. Workshop on Intelligent Robots and Systems*, Osaka, Japan, pp 1236-1241, 1991.

[11] I. Kolmanovsky, N. H. McClamroch., Developments in Nonholonomic Nontrol Problems, *IEEE Control Syst. Mag.*, Vol. 15, pp. 20–36, December. 1995.

[12] T-C Lee, C. H. Lee, C-C Teng, Tracking Control of Mobile Robots Using the Backsteeping Technique, *Proc. 5th. Int. Conf. Contr., Automat., Robot. Vision*, Singapore, pp 1715-1719, December 1998.

[13] T-C Lee, K. Tai, Tracking Control of Unicycle-Modeled Mobile robots Using a Saturation Feedback Controller, *IEEE Trans. On Control Systems Technology*, Vol. 9, No. 2, pp 305-318, March 2001.

[14] T. H. Lee, F. H. F. Leung, P. K. S. Tam, Position Control for Wheeled Mobile Robot Using a Fuzzy Controller, IEEE pp 525-528, 1999.

[15] W. Nelson, I. Cox, Local Path Control for an Autonomous Vehicle, *Proc. IEEE Conf. On Robotics and Automation*, pp. 1504-1510, 1988.

[16] K. M. Passino, S. Yurkovich, *"Fuzzy Control"*, Addison Wesley Longman, USA 1998.

[17] S. Pawlowski, P. Dutkiewicz, K. Kozlowski, W. Wroblewski, Fuzzy Logic Implementation in Mobile Robot Control, *2nd Workshop On Robot Motion and Control,* pp 65-70, October 2001.

[18] C-C Tsai, H-H Lin, C-C Lin, Trajectory Tracking Control of a Laser-Guided Wheeled Mobile Robot, *Proc. IEEE Int. Conf. On Control Applications*, Taipei, Taiwan, pp 1055-1059, September 2004.

[19] K. T. Song, L. H. Sheen, Heuristic fuzzy-neural Network and its application to reactive navigation of a mobile robot, *Fuzzy Sets Systems*, Vol. 110, No. 3, pp 331-340, 2000.

[20] S. V. Ulyanov, S. Watanabe, V. S. Ulyanov, K. Yamafuji, L. V. Litvintseva, G. G. Rizzotto, Soft Computing for the Intelligent Robust Control of a Robotic Unicycle with a New Physical Measure for Mechanical Controllability, Soft Computing 2 pp 73 – 88, Springer-Verlag, 1998.

**Oscar Castillo** is a Professor of Computer Science in the Graduate Division, Tijuana Institute of Technology, Tijuana, Mexico. In addition, he is serving as Research Director of Computer Science and head of the research group on fuzzy logic and genetic algorithms. Currently, he is President of HAFSA (Hispanic American Fuzzy Systems Association) and Vice-President of IFSA (International Fuzzy Systems Association) in charge of publicity. Prof. Castillo is also Vice-Chair of the Mexican Chapter of the Computational Intelligence Society (IEEE). Prof. Castillo is also General Chair of the IFSA 2007 World Congress to be held in Cancun, Mexico. He also belongs to the Technical Committee on Fuzzy Systems of IEEE and to the Task Force on "Extensions to Type-1 Fuzzy Systems". His research interests are in Type-2 Fuzzy Logic, Intuitionistic Fuzzy Logic, Fuzzy Control, Neuro-Fuzzy and Genetic-Fuzzy hybrid approaches. He has published over 50 journal papers, 5 authored books, 10 edited books, and 160 papers in conference proceedings.

**Patricia Melin** is a Professor of Computer Science in the Graduate Division, Tijuana Institute of Technology, Tijuana, Mexico. In addition, she is serving as Director of Graduate Studies in Computer Science and head of the research group on fuzzy logic and neural networks. Currently, she is Vice President of HAFSA (Hispanic American Fuzzy Systems Association) and Program Chair of International Conference FNG'05. Prof. Melin is also Chair of the Mexican Chapter of the Computational Intelligence Society (IEEE). She is also Program Chair of the IFSA 2007 World Congress to be held in Cancun, Mexico. She also belongs to the Committee of Women in Computational Intelligence of the IEEE and to the New York Academy of Sciences. Her research interests are in Type-2 Fuzzy Logic, Modular Neural Networks, Pattern Recognition, Fuzzy Control, Neuro-Fuzzy and Genetic-Fuzzy hybrid approaches. She has published over 50 journal papers, 5 authored books, 8 edited books, and 140 papers in conference proceedings.

**Leslie Astudillo** is a graduate student in Computer Science with the Division of Graduate Studies and Research in Tijuana Institute of Technology, Mexico. She has published 2 papers in Conference Proceedings.

**Arnulfo Alanis** is a Professor with the Division of Graduate Studies and Research in Tijuana Institute of Technology, Mexico. He has published 2 Journal papers and 15 Conference Proceedings papers.

**Jose Soria** is a Professor with the Division of Graduate Studies and Research in Tijuana Institute of Technology, Mexico. He has published 4 Journal papers and 5 Conference Proceedings papers.

**Luis Aguilar** is a Professor with the Center for Research in Digital Systems in Tijuana, Mexico. He has published 5 Journal papers and 15 Conference Proceedings papers. He is member of the National System of Researchers of Mexico, and member of IEEE. He is member of the IEEE Computational Intelligence-Chapter Mexico, and member of the Hispanic American Fuzzy Systems Association. He is also member of the International Program Committees of several Conferences, and reviewers of several International Journals.