EUROPEAN ORGANIZATION FOR NUCLEAR RESEARCH

CERN/EF 86-1
6 February 1986

PULSE STRETCHING IN A Q-SWITCHED RUBY LASER FOR BUBBLE CHAMBER HOLOGRAPHY

G. Harigel[1]
CERN, CH-1211 Geneva 23, Switzerland

C. Baltay, M. Bregman[2], M. Hibbs[2], A. Schaffer[3]
Columbia University, Nevis Laboratories, Irvington, N.Y. 10533, USA

H. Bjelkhagen[4], J. Hawkins, W. Williams
Fermilab, Batavia, IL. 60510, USA

P. Nailor
Imperial College, London SW7, England

R. Michaels[5]
Rutgers University, New Brunswick, N.J. 08903, USA

H. Akbari
Tufts University, Medford, MA. 02155, USA

Submitted to Applied Optics

---

[1] Also at Columbia University, Nevis Laboratories, Irvington, NY 10533, USA

[2] Now at IBM, Thomas J.Watson Research Center, Yorktown Heights, NY 10598, USA

[3] Now at CERN, CH-1211 Geneva 23, Switzerland

[4] Now at Northwestern University, Evanston, IL. 60201, USA;
Permanent address: Royal Institute of Technology, Division of Production Engineering, S-10044 Stockholm 70, Sweden

[5] Now at Hewlett Packard, Palo Alto, CA. 94304, USA

ABSTRACT

A pulse stretching technique in a Q-switched ruby laser oscillator is described. This system gives fairly flat pulses with adjustable duration up to ~100 μs and good coherence in excess of 11 m. The cavity is followed by several amplifiers and produces light energies up to 25 J for holographic recording of particle tracks in the Fermilab 15-Foot Bubble Chamber. Since short pulses of some 50 ns duration at the required energy give rise to boiling during the chamber's expansion, a reduction of the instantaneous power at a given energy by stretching the pulse helps to suppress this unwanted after-effect. The considerably increased coherence length will find applications in many fields of pulsed holography and its use with fiber optics is particularly promising.

1. INTRODUCTION

An initial test of holographic recording of particle tracks in a 35 m^3 cryogenic bubble chamber at CERN (BEBC) was successful [1]. However, the use of a powerful Q-switched ruby laser produced, as an unwanted after-effect, boiling of the chamber liquid which adversely affects the quality of the conventional photographs taken some 10 ms later. This boiling is in all probability due to the absorption of light on small impurities (with diameters of a few micrometers or even fractions of a micrometer), which float in the bubble chamber liquid [2-4]. Their heating gives rise to bubble nucleation during the expansion cycle. In this first test it was demonstrated that, at a given energy (~ 5 J), the boiling is suppressed by using a free-lasing pulse (~ 1 ms) instead of the Q-switched pulse ($\leq$ 50 ns). The 1 ms operation mode of the laser is unsuitable for holography, mainly due to the absence of the required coherence length but also due to bubble movement and size variation during illumination. We therefore have to aim for an intermediate pulse duration with good beam quality, as had been proposed earlier [1]. It is the purpose of this article to describe our technique, which reduces the instantaneous power at constant energy and solves - at least partially - the boiling problem. Parallel approaches, not the subject of this paper, consist of the reduction of the overall energy requirement by the increase of the sensitivity of existing holographic emulsions [5], and the decrease of impurities by filtering the liquid [6].

Long pulses have been obtained from Q-switched lasers by introducing non-linear materials into the cavity, lengthening the cavity, or by use of a feedback loop to control the switching of an electro-optic shutter. The first two methods produce light pulses whose time variation is either Gaussian or very asymmetric: they will not be considered further, since the pulse for our application must be fairly flat over at least several microseconds, and the rise and decay times short compared with the flat top. Therefore we apply the third method in two oscillator arrangements, using different electronic circuits. In the relevant papers [7-10] the effect of pulse stretching upon the coherence length and the TEM_{oo}-mode, important for our application, has not been discussed.

2. FEEDBACK-CONTROLLED LASER SYSTEMS AND EXPERIMENTAL RESULTS

For the illumination of $\leq$ 10 m^3 of the fiducial volume of the 15-Foot Bubble Chamber at Fermilab, a system similar to that described in [1] with light energy up to ~ 25 J is needed [11]. This energy will be obtained with an oscillator stage followed by several amplifiers with increasing ruby rod and laser beam diameter. Since we expect no serious deterioration of the quality of the initial light pulse going through these amplifiers [10] (for effects of high pumping of amplifier rods and back reflections see Appendix), we can limit ourselves here to the description of the oscillator.

The original development was carried out on a modified KORAD Laser with a feedback circuit similar to [10] and tested during a technical run of the Fermilab 15' Bubble Chamber; the system used later in the physics run was a new design, adapted to the JK Laser System 2000.

2.1. The KORAD Laser

For the layout of the cavity we used various elements from a KORAD K-1000 Ruby Laser System, given to us by Columbia University's Radiation Laboratory. Fig. 1 shows the geometrical arrangement. The length of the cavity is chosen to be 100 cm, similar to the layout described in [10]. In order to keep the cavity as simple as possible we extract the light needed for the feedback loop through the rear 95% reflector rather than from a beam splitter placed inside. The outgoing 5% of the light passes through a ruby amplifier to give sufficient intensity and flexibility for the operation of the feedback electronics. After only some 30 cm pathlength (1 ns delay) the light hits a 45 mm diameter photodiode (ITT FW114A), which acts, through the electronic circuit shown in fig. 2(a), on the Pockels cell. The left side of the circuit serves to adapt the trigger to the KORAD power supply. We chose a KD*P Pockels cell (Quantum Technology, model QK-10) with a low quarter-wave voltage (2100 V) and low capacitance (6 pF); the connecting wires were kept short to minimize the stray capacitance of the circuit. A 200 Ω load resistor R was employed as shown in fig. 2(a). The Pockels cell was switched on by means of a Krytron switch (EG&G, type KN6B). To operate the system the Pockels cell was initially biased to its quarter-wave voltage thereby preventing laser action. On firing the Krytron tube the Pockels cell bias falls to zero and light amplification begins. The switching time of about 1 ns, determined by the load resistor and the Pockels cell capacitance, is insignificant compared with the pulse build-up time of about 200 ns. The 2 MΩ isolation resistor prevents C_2 charging from the power supply during the laser pulse duration but is low enough to keep the Krytron conducting.

Fairly flat pulses are obtained by adding to the original negative feedback the inductance L_1 in series with the capacitor C_2, making it a compound feedback (for theoretical details see [10]). Typical stretched pulses (with some mode-beating) are shown in the oscilloscope picture of fig. 3. About 20% of all pulses exhibit an overshoot (maximum about twice the average height) at the beginning of the pulse, which does not affect significantly our application. About 2 µs after the Krytron fired the differential Pockels cell potential rose rapidly closing off all lasing. The output from the circuit was only marginally effective given the 2.1 kV quarter-wave potential of the Pockels cell. A 0.02 µF capacitor together with 1 kΩ in parallel with the phototube brings more energy close to the phototube (fig. 2(b)) and repeatable 5 µs pulses were obtained. Conventional Q-switched pulses with ~ 100 ns fwhm could be easily produced by blocking the light pass to the photodiode.

Measurements of the output pulse made with a cone calorimeter showed that between 80 and 90% of the energy of the Q-switched pulse is retained in the extended pulse.

In order to get good coherence length the oscillator stage was equipped with a temperature stabilized intracavity etalon (< 0.1°C). A 2 mm aperture was used to obtain the TEM_{oo}-mode. The coherence length was measured holographically behind the first amplifier. At this stage it was demonstrated the action of the stretching circuitry improved the coherence length (e.g. coherence lengths of up to ~ 4 m were observed).

After field tests in the bubble chamber, the boiling was noticeably reduced for these prolonged pulses, up to 3 µs, as compared to the Q-switched pulse [12]. However the level of boiling was still unacceptable, so supplementary research was conducted to try to increase the pulse length further thereby reducing the peak power.

2.2 The JK Laser

A commercially available holographic ruby laser system (JK Lasers System 2000) was adapted to our application. The oscillator has high mechanical stability, a higher gain than in the KORAD laser and is equipped with two tilted intracavity etalons, which are thermally locked into the cooling system of the ruby rod to ensure maximum mode stability. Our alterations of the oscillator stage consisted in the use of a 80% rear mirror (instead of the supplied 100% mirror), and in replacing the Pockels cell supplied by JK by one from Lasermetrics with a quarter-wave voltage of 1.15 kV. Nominal values of the JK 2000 System are a 30 J Q-switched pulse of 30 ns duration, which is obtained by the oscillator, followed by three amplifiers. An apparently uniform spatial energy distribution after the last amplifier in the near field is observed, as it is customary for holographic lasers. It deteriorates in the far field, still giving a fairly homogeneous central region, but is surrounded by a hot ring of irregular shape (see Appendix). We did not observe any significant dependence of the spatial light distribution in the far field (~ 25 m) upon pulse duration.

The feedback circuit of fig. 2(b) was used initially to stretch laser pulses with the new JK Laser. However, after field testing it was obvious that the circuit must be modified for our application to reduce the light spike at the beginning of the pulse and inhibit post lasing for ~ 1 ms (i.e. until the population inversion is depleted through spontaneous emissions). Also, about 10-20% of the stretched pulses showed ripple with a magnitude of > 50%.

As with the compound feedback circuit of Lovberg et al. [10] stray capacitance is a significant factor that governs the response time of this circuit. Consequently, a stray acceptance of 20-50 pF can cause destabilizing delays of 50-100 ns. This allows the beginning of the laser pulse to pass through the Pockels cell without negative feedback. We reduced the initial light spike by shortening the RG58 cable length between the fast photodiode and the feedback circuit: the effect of the reduction of the stray capacitance by ~ 30 pF upon the laser light flux vs. time was calculated by solving the laser rate equations and the Ohms law circuit and is shown in figs. 4(a,b). For this calculation an algorithm called DVERK [13] was used. To further improve the bandpass characteristics of this system we removed the 1 kΩ resistor in series with the 0.03 µF capacitor on the feedback side of the Pockels cell (fig. 2(b)).

Elimination of postlasing required a large energy source to hold off the stored energy in the laser rod. We used a second Krytron to switch or "clamp" the Pockels cell voltage on the non-feedback side to its quarter-wave value. But we found that the KN6B Krytrons would fail in 1-2 days if they were triggered 3 times per minute and held on for ~ 3 ms per trigger, not unexpectedly, since Krytrons are not D.C. switches. Thus we developed a clamp that could switch ~ 1.2 kV in ~ 0.1-0.2 µs using a SCR (2N5207). In this "slow" turn-on circuit lasing did not occur until 1-2 µs after the start pulse triggered the feedback Krytron thus we replaced both the feedback and the clamp Krytrons with 1.2 kV SCR's. Fig. 5 shows the general layout of the JK Laser System, the feedback optics and the block diagram of the pulse stretching electronics with the clamping circuit, as used for the physics run. Fig. 6 gives the details of the electronics.

The SCR circuit functions in the following manner: Initially the feedback side of the Pockels cell (V1) is at ground level and the non-feedback side (V2) is biased to a negative 1.1 kV, its quarter-wave potential. Then a CMOS pulse from the JK controls, called the Pockels cell synchronisation (sync), triggers the "feedback" SCR causing it to close and allowing the voltage at V2 to exponentially decay to ground with an RC time determined by the 500 Ω resistor and the 0.03 µF capacitor at V2. As lasing begins the voltage at V1 swings positive and tries to follow the laser light hitting the feedback photodiode. The magnitude of this positive voltage at V1 can be adjusted by the bias voltage across the photodiode. The bias level typically ran between 250-400 V. If a 20 µs pulse is desired then 20 µs after the Pockels cell sync occurs a second TTL pulse is produced by a LeCroy 222 delay pulse generator. This triggers the "clamp" SCR and closes it so that V2 now sees -1.1 kV within ~ 0.2 µs. Since the holding current for the 2N5207 SCR's is ~ 40 mA we needed to supply a stored charge source capable of providing an average current of 40 mA for ~ 3 ms that would not trip off whilst providing initially much higher instantaneous peak currents. Thus the 10 µF capacitor bank was added. After about 3 ms the current through the two SCR's drops below the holding level and both switches turn off. At this point the various H.V. power supplies begin recharging the circuit. A typical voltage waveform at V2 and V1 is shown in fig. 7.

Two particular requirements on the pulse stretching circuit for our application consisted in having a minimum delay after the fire pulse sent to the laser, and in producing a Q-switched pulse without major modifications on the circuit for tests of a two-beam holographic system [14].

The oscillator flashlamps build-up time which is determined by an inductance/ capacitance circuit is set to ~ 1.2 ms. However, we wish to have light at 1 ms, which means that a lot of inversion is left in the ruby rod, and, consequently, we must have a clamping circuit to gate off the light pulse. Early studies indicated that operating before the peak flash also reduced the start-of-pulse spike overshoot. The minimum switching time (set by the RC constant for the top SCR) is ~ 1 µs, which results in a minimum reliable pulse length ≧ 2.5 µs. For pulse durations ≦ 20 µs we must change the RC for the top SCR as it now switches the Pockels cell on in ~ 20 µs (for 40 µs pulses).

Best pulses with shorter delays are obtained by matching the Pockels cell voltage V_{PC} with the oscillator voltage V_{os} and the delay Δ. These can be adjusted so that there is no pre- or post-lasing, no overshoot on the pulse, and to obtain the required energy in the pulse. These adjustments depend on the pulse duration, i.e. on the time-dependence of the rod-inversion depletion. For shorter pulses, a longer delay must be used to extract the same energy. An alternative is to pump the amplifiers harder, but there is an upper limit due to saturation. Once the delay is set, the combination of V_{os} and V_{PC} can control the overshoot of the pulse by sitting on the threshold for pre-lasing. If, for typical values of Δ and V_{os}, the Pockels cell is shut too hard before the open signal from the circuit, then an overshoot results due to the higher inversion build-up before punch through initiates the pulse. Hence the Pockels cell is used as a threshold device at 60-80% of the quarter-wave voltage. This allows for more easily controlled pulse build-up and may explain the increased coherence length. Reducing the delay further results in post-lasing and the deficiency of required energy in the pulse. An alternative to reduce this delay further is to reduce the build-up time of the laser by reconfiguring the inductance/capacitance circuit.

The clamp circuit must be effective for at least 1 ms after pulse extraction to stop post-lasing, hence the use of the 10 μF capacitor bank.

Supplemental behaviour is a form of Q-switched pulse. By making $\Delta > t_{\text{flash peak}}$ (e.g. $\Delta \sim 1.55$ ms), and running the oscillator hard ($V_{os} \sim 2.3$ kV), and having the Pockels cell fully shut at the start, and increasing the feedback gain ($V_{PT} \uparrow 2.0$ kV, and add a diffuser to cover more fully the phototube active surface), a giant (Q-switched) pulse with ~ 220 ns fwhm results. As punch through begins at the Pockels cell, the phototube supplies a large voltage spike to the Pockels cell from the feedback light, this opens the Pockels cell and hence it is a form of electronic passive Q-switch. The pulse occurs at ~ 0.9 ms after the fire pulse and frequently there is post-lasing. The coherence length is ~ 1-1.5 m due to the high V_{os}, but it is useful as it enables us to switch easily between Q-switched and pulse-stretched modes.

Figs 8(a-d) show pulses of various duration measured behind the last amplifier, which are remarkably flat with almost no spikes at the beginning and which do not exhibit any mode-beating; there was no pre- or postlasing. Only for very long pulse durations the depletion of the ruby rods becomes apparent (fig. 8(d)). Typical output energies of the oscillator were 20-25 mJ, which could be amplified up to 5 J max., whilst retaining smooth output energy waveform in time. Stretching beyond 100 μs does not appear to be desirable for our application due to vibration and bubble movement and would be difficult to achieve with the present electronics. The maximum repetition rate of the laser with output energies $\leqq 8$ J is about once every 8 s.

A remarkable asset of stretched pulses is the considerably increased coherence length, as compared with the Q-switched operation (~ 1-2 m). It was measured in the laboratory with a layout shown in fig. 9. Replayed holograms are displayed in figs 10(a,b).

The results of all coherence length measurements are shown graphically in fig. 11. The ordinate is the observed white light diffraction from the holograms. This coherence length is defined as the path difference between the reference and object beams for which the diffraction efficiency on reconstruction is observed to fall to ~ 10% of its peak value. Running with a single Q-switched pulse of τ_{fwhm} = 85 ns (derived using an 80% rear reflector in the cavity), we obtained ~ 1.5-2 m coherence length. By using the double pulsing feature of the oscillator with least possible pulse separation (~20 μs) and the bias set to produce the most power in the second pulse (≧ 95%), the coherence length is observed to increase in about 60% of the pulses to nearer 3-3.5 m, but is in the rest of the pulses rather short. As with pulse stretching the mechanism for this is the prevention of the high gain oscillator cavity latching on to several modes at the onset of the pulse, as the first pulse is of small amplitude. This double pulsing technique needs further investigation to obtain reliable results.

The coherence length for $2.5\ \mu s \leqq \tau_p \leqq 15\ \mu s$ is consistently in excess of 8 m and that for $\tau_p = 2.5\ \mu s$ is even in excess of 11 m. This latter result arose by putting in an extra 3 m of path length for the reference beam keeping the geometry otherwise the same as for the other measurements. This represented the greatest path difference we could achieve in the laboratory and the whole field covered by the hologram shows no appreciable loss of diffraction efficiency apart from the obvious $1/r^2$ fall-off of the illuminating object light.

The gradual decrease in diffraction efficiency observed for $5\ \mu s \leqq \tau_p \leqq 40\ \mu s$ is almost certainly due to movement of the reference beam during exposure, and the fringes observed in the longer pulses due to mode mixing from the oscillator, caused by either the oscillator movements or/and the temperature instability of the etalons during these long exposures.

Pulse stretching is also desirable for the transporting of high energy laser light through optical fibers since they are easily destroyed at high power densities. It might find application in a two-beam technique for large bubble chambers [14], proposed as an alternative to our presently used one-beam holography.

3. CONCLUSIONS

It has been shown that stretched pulses with adjustable duration up to 100 µs in the TEM_{oo}-mode can be obtained from a ruby oscillator stage, which is equipped with a negative feedback system and a clamping circuit. This increase in pulse length from 30 ns to 40 µs, at the energy level of a few Joules, suppressed the boiling in the bubble chamber liquid. The stretching also considerably increased the coherence length, and the time structure and duration of the pulse remained essentially unchanged after the passage through three amplifiers. Future applications of stretched pulses may include the transport of high intensity laser light through fibers, and the holography of volumes larger than previously possible with a Q-switched ruby laser, due to the increased coherence length.

Acknowledgements

We are particularly grateful to Dr. W.M. Smart and the 15' Bubble Chamber crews for their dedicated efforts and help during the installation of the lasers at Fermilab and the runs. We thank Prof. S. Hartmann of the Columbia University Radiation Laboratory for supplying us with the KORAD laser used initially, R. Barby for the help with electronics, Dr. R. Sekulin and E. Wesly for their assistance during the tests. We greatly appreciate that JK Lasers made a laser oscillator available to us for initial tests at their factory and for the assistance of T. Lang and T. Read. The work would not have been possible without the generous support of Fermilab. H.A. thanks the Department of Energy (Contract # DE-AC02-883ER40085), and P.N. the University of Hawaii and the UK Science and Engineering Council for support.

APPENDIX

EFFECTS FROM AMPLIFIERS AND BACK-REFLECTIONS

The laser light from a ruby oscillator stage will suffer (some) spatial and temporal distortions after passage through amplifiers. These effects are discussed in detail in text books (see e.g.[15]).

Spatial distortions arise from non-uniform pumping, non-uniformities in the active material, gain saturation, diffraction effects and thermal distortions. We attribute the observed far-field structure of our beam essentially to the non-uniform pumping of the rods with symmetrically arranged linear flashtubes: the oscillator has two, the first and second amplifier four, and the third amplifier six such tubes. The almost hexagonal structure of the hot ring of the beam in the far field (25 m), observed only after focusing the beam once in vacuum and not present otherwise, indicates that the deviation from Gaussian profile originates mostly from non-uniform pumping of the amplifiers.

Temporal distortions can be subdivided into pulse-shape distortions, and into frequency modulation. Only the first item will be discussed further. The leading edge of the oscillator pulse stimulates the release of stored energy in the amplifiers, its amount can be somewhat influenced by the delay between the oscillator pulse and the firing their flashlamps. Pumping the amplifier rods too high may also change the temporal pulse shape.

Any laser light reflected from downstream beam elements (mirrors, apertures) is amplified backwards and will reach the photodiode of the feedback circuit. It can change the time structure of the stretched pulse considerably: Figs 12(a) and 12(b) show the light output from the laser and the voltage response of the phototube for a pulse stopped immediately behind the last amplifier and one going all the way to the bubble chamber, respectively. Such an unwanted effect can be suppressed to a large extent by proper antireflection coating of optical elements in the beam path, by baffles to absorb straylight, and by an optical isolator installed behind the last amplifier.

REFERENCES

[1] H. Bjelkhagen, G. Harigel, F. Pouyat, W. Seidl, C. Baltay, M. Bregman, F. Eisler, M. Hibbs, A. Schaffer, R. Cence, E.B. Brucker, T.R. Hart, Holographic recording of cosmic ray tracks in BEBC, Nucl. Instr. & Meth. in Phys. Research 227 (1984) 437.

[2] G. Harigel, H.J. Hilke, G. Linser, F. Schenk, On the formation of narrow bubble tracks by a laser beam in argon, nitrogen and hydrogen bubble chambers, Nucl. Instr. & Meth. 188 (1981) 517.

[3] F.H. Poesposoetjipto, E. Hugentobler, A study on bubble formation in a bubble chamber, Helvetica Physica Acta 43 (1970) 203.

[4] R.C. Stamberg, D.E. Gillespie, Laser stimulated nucleation in a bubble chamber, J. Applied Phys. 37 (1966) 459.

[5] H. Bjelkhagen, Holographic recording materials and the possibility to increase their sensitivity, CERN/EF 84-7, March (1984), unpublished.

[6] J. Kilmer, W.M. Smart, private communication.

[7] F.R. Marshall, D.L. Roberts, Use of electro-optical shutters to stabilize ruby laser operation, Proc. of the IRE (Corresp.), vol. 50, October 1962, 2108.

[8] C.H. Thomas, E.V. Price, Feedback control of a Q-switched ruby laser, IEEE Journal of Quantum Electronics, vol. QE-2, September 1966, 617.

[9] V.I. Mishin, Ruby laser for generating microsecond light pulses having a narrow spectrum (original in Russian), Prib.Tekh. Eksp., No.4 (1971) 181.

[10] R.V. Lovberg, E.R. Wooding, M.L. Yeoman, Pulse stretching and shape control by compound feedback in a Q-switched ruby laser, IEEE Journal of Quantum Electronics, vol. QE-11, January 1975, 17.

[11] M. Hibbs, W.M. Smart, Laser dispersing lenses for holography in large bubble chambers (1984), unpublished.

[12] G. Harigel, Pulse stretching in a Q-switched ruby laser for bubble chamber holography, Proc. Photonics Applied to Nuclear Physics: 2, Nucleophot, Strasbourg (1984), CERN 85-10 (1985) 72.

[13] T.E. Hull, W.H. Enright, K.R. Jackson, "User's Guide for DVERK - A subroutine for solving non-stiff ODE's", Dept. of Computer Science, Univ. of Toronto, TR No. 100, October 1976, and "A theoretical criterion for comparing Runge-Kutta Formulas", ibid. TR No.101, January 1977.

[14] H. Bjelkhagen, F. Pouyat, P. Kasper, E.E. Miranda, R.L. Sekulin, W. Venus, L. Walton, Test of high resolution two-beam holography in a model of the Big European Bubble Chamber, BEBC, Nucl. Instr. & Meth. in Phys. Research 220 (1983) 300.

[15] W. Koechner, Solid-State Laser Engineering, Springer-Verlag, New York, Heidelberg, Berlin, (1976).

FIGURE CAPTIONS

Fig. 1 Layout of the KORAD oscillator stage with feedback optics and four amplifiers (schematic): OE - output etalon, MS - mode selection aperture, R - ruby rod, PC - Pockels cell, RM - rear mirror, AO - amplifier, M1, M2, M3 - mirrors, PD - photodiode, E1 - feedback electronics, A1, A2, A3, A4 - amplifiers, BE - beam expander.

Fig. 2 Feedback electronics: PC - Pockels cell, FW114A - photodiode, KN6B - Krytron.

(a) Lovberg circuit, KORAD Laser, pulse duration ≦ 2.5 µs.

(b) Modified circuit, KORAD Laser, pulse duration ≦ 5 µs; improved version used initially with JK Laser, pulse duration ≦ 10 µs.

Fig. 3 Typical stretched pulses obtained with the KORAD laser with electronic circuit (fig. 2(a)). 200 ns/division.

Fig. 4 Laser flux vs. time, calculated for feedback circuit shown in fig. 2:

(a) with 50 pF stray capacitance,
(b) with 20 pF stray capacitance.

Fig. 5 Layout of the JK Laser System 2000, the feedback optics and the block diagram of the pulse stretching electronics (schematic):
PD - photodiode, RM - 80% reflective rear mirror (r = 5 m),
PC - Pockels cell, IE - tilted etalons, R - ruby of oscillator,
OM - output mirror, L - focusing lens, SF - spatial filter,
A1, A2, A3 - amplifiers, BE - beam expander.

Fig. 6 The pulse stretching and clamping circuit electronics for the JK Laser System, upper part stretching, lower part clamping system.

Fig. 7 Voltage waveform on the two sides of the Pockels cell (10 µs/div): The upper trace is the monotone decreasing voltage V2 (500 V/div). The initial value of V2 is 1000 V. The lower trace is the feedback voltage V1 (200 V/div).

FIGURE CAPTIONS (Cont'd)

Fig. 8 Typical light pulses obtained in the JK Laser with the compound feedback and clamping circuit: V_{os} - oscillator voltage, V_{PC} - Pockels cell voltage, V_{cl} - clamping circuit voltage, Δ - delay between firing of flashlamp and opening of the Pockels cell.

	V_{os}	V_{cl}	V_{PC}	Δ
(a) 6.5 µs pulse (2 µs/div)	1.68 kV	1.20 kV	0.80 kV	1.06 ms
(b) 35 µs pulse (10 µs/div)	1.80 kV	1.15 kV	0.95 kV	0.98 ms
(c) 63 µs pulse (10 µs/div)	1.82 kV	1.15 kV	0.95 kV	0.95 ms
(d) 95 µs pulse (20 µs/div)	1.65 kV	1.15 kV	0.93 kV	0.95 ms

Fig. 9 Layout for the holographic measurement of the coherence length (schematic). The small bar perpendicular to the beam serves for checking of the high-frequency contouring.

Fig. 10 Replayed holograms of stretched pulses from JK Laser, obtained with the set-up of fig. 9. The mark 30 on the Scotchlite bar corresponds to 3 m length.

(a) 2.5 µs pulse duration.
(b) 10 µs pulse duration.

Fig. 11 Dependence of coherence length upon pulse duration of the stretched pulse, obtained with the feedback circuit in the JK Laser.

Fig. 12 Effect of back reflections (10 µs/div): lower trace: pulse stopped after last amplifier; upper trace: pulse going into bubble chamber.

(a) Light output from laser.
(b) Voltage response of feedback phototube.

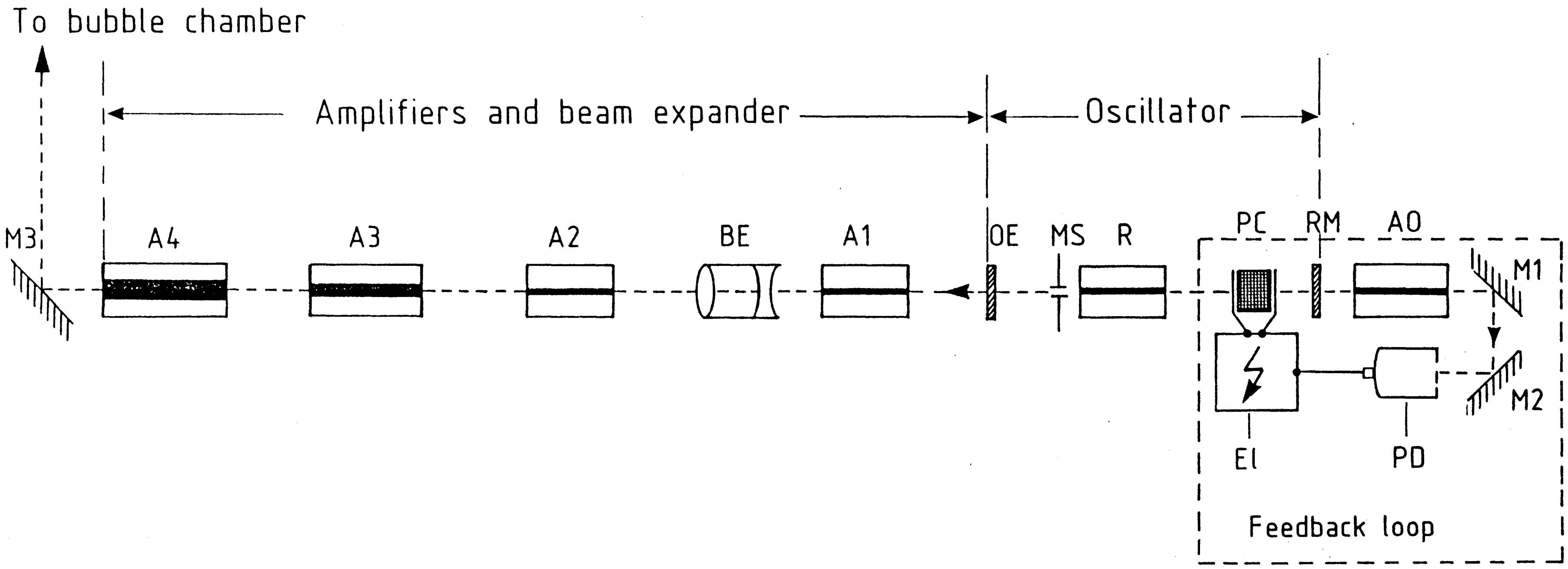
To bubble chamber
Amplifiers and beam expander
Oscillator
M3
A4
A3
A2
BE
A1
OE
MS
R
PC
RM
AO
M1
M2
EI
PD
Feedback loop

Fig. 1

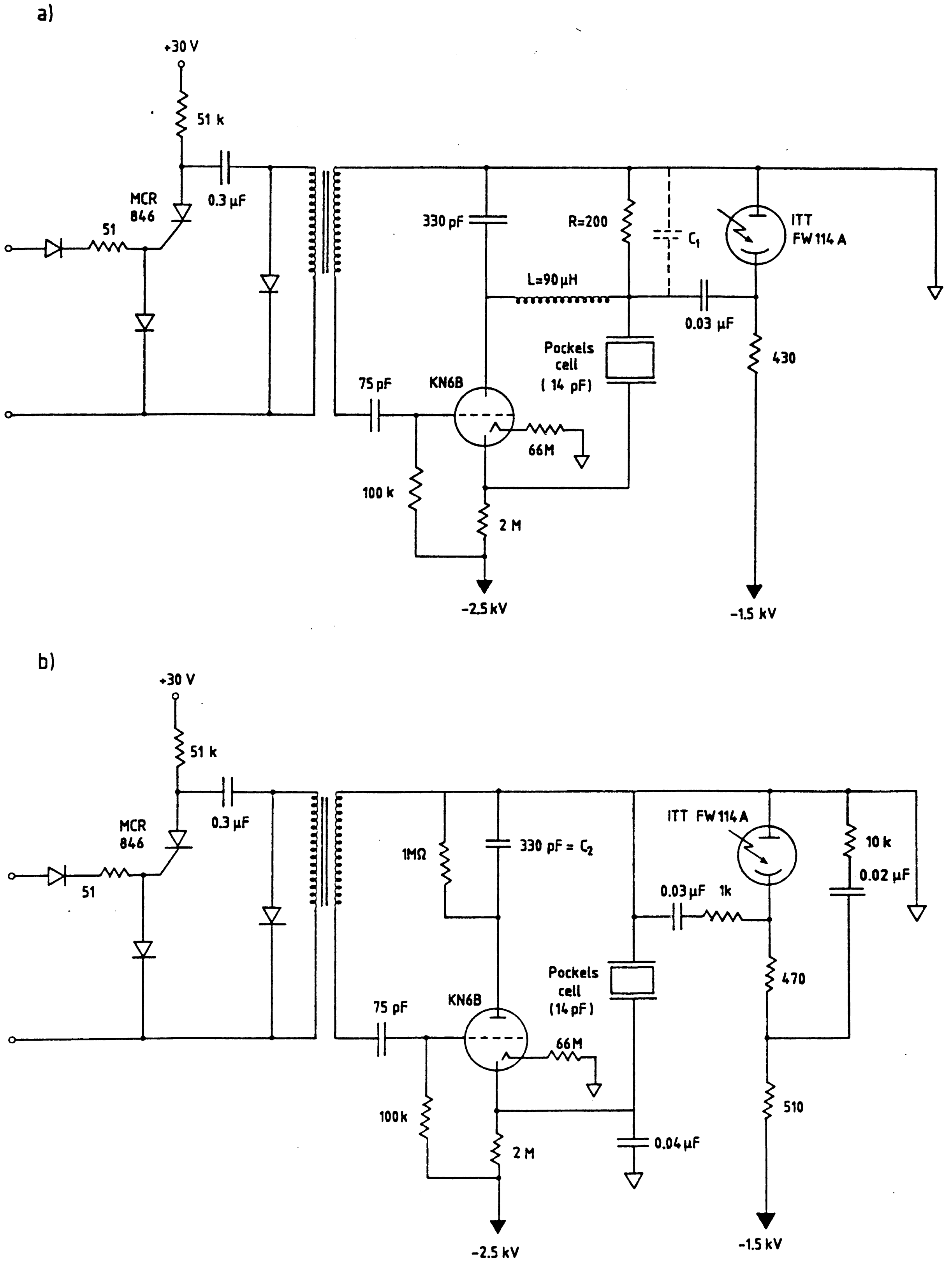
a)
+30 V
51 k
MCR
846
0.3 µF
51
330 pF
R=200
C₁
ITT
FW 114 A
L=90 µH
0.03 µF
Pockels
cell
(14 pF)
430
75 pF
KN6B
66M
100 k
2 M
-2.5 kV
-1.5 kV
b)
+30 V
51 k
MCR
846
0.3 µF
51
1MΩ
330 pF = C₂
ITT FW 114 A
10 k
0.02 µF
0.03 µF
1k
Pockels
cell
(14 pF)
470
75 pF
KN6B
66M
100k
2 M
0.04 µF
510
-2.5 kV
-1.5 kV

Fig. 2

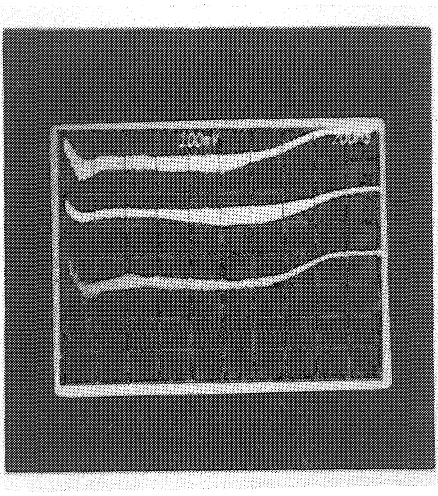

Fig. 3

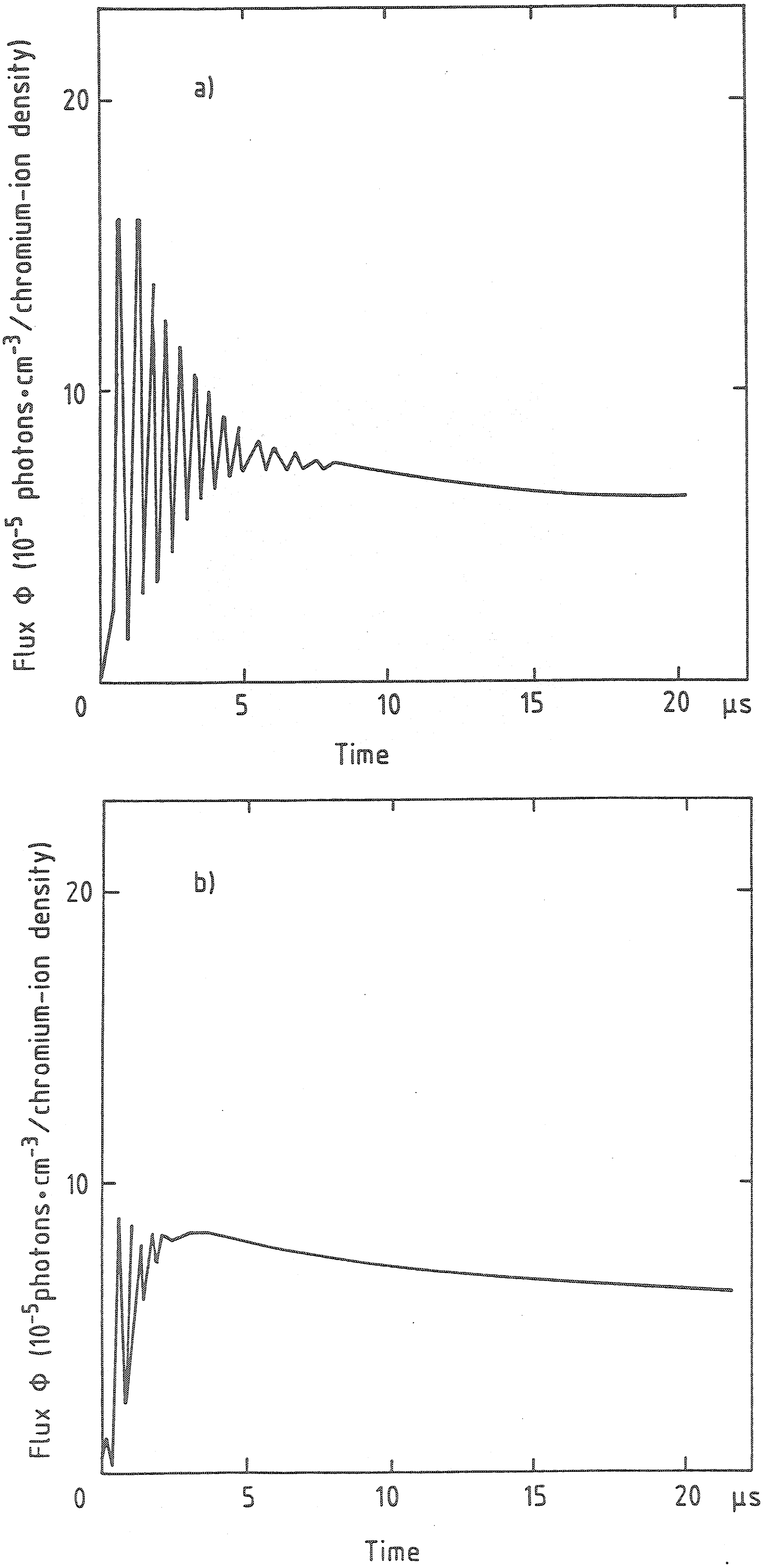
a)
Flux Φ (10⁻⁵ photons·cm⁻³/chromium-ion density)
20
10
0
5
10
15
20
µs
Time
b)
Flux Φ (10⁻⁵photons·cm⁻³/chromium-ion density)
20
10
0
5
10
15
20
µs
Time

Fig. 4

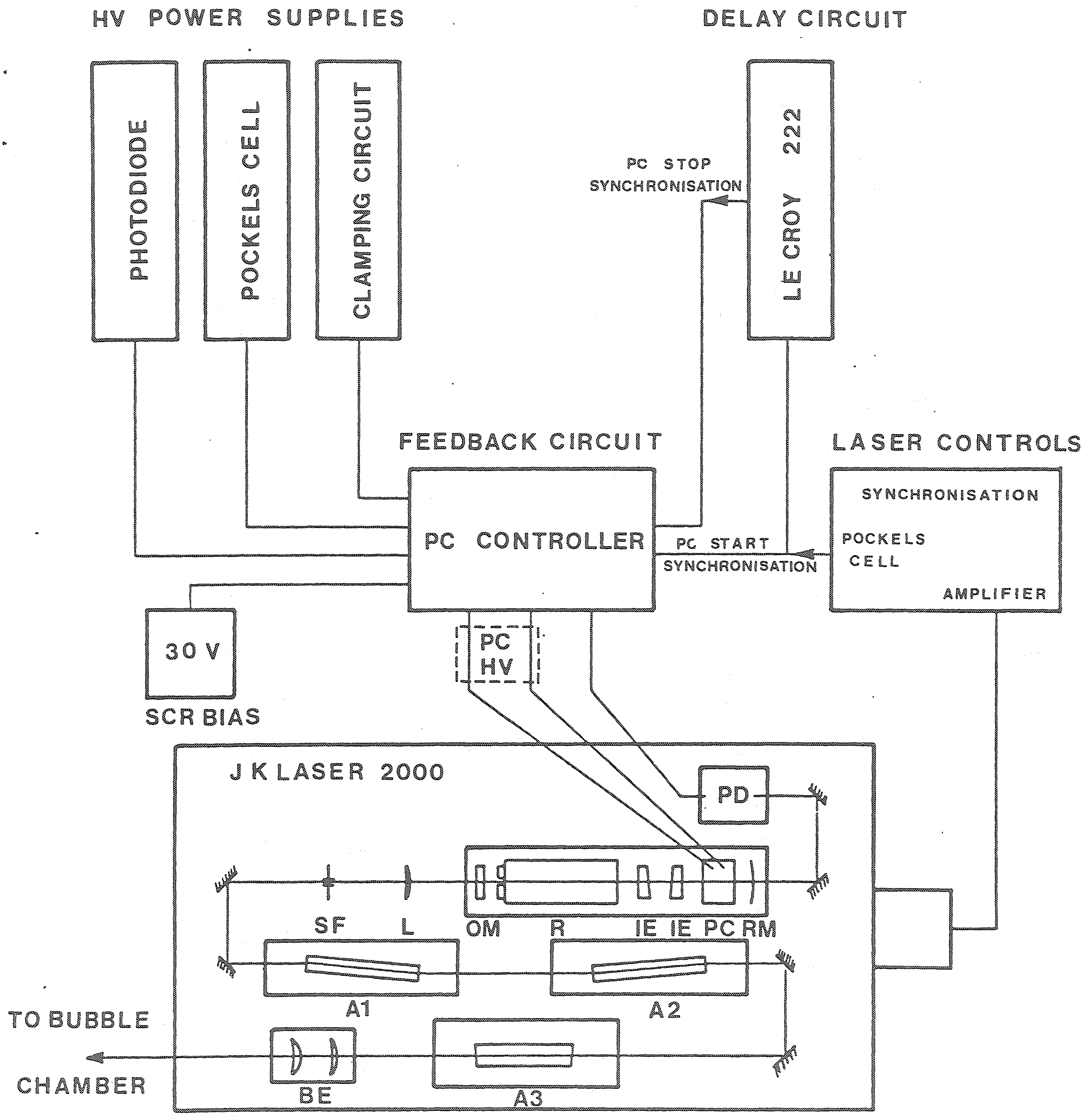
HV POWER SUPPLIES
PHOTODIODE
POCKELS CELL
CLAMPING CIRCUIT
DELAY CIRCUIT
LE CROY 222
PC STOP SYNCHRONISATION
FEEDBACK CIRCUIT
PC CONTROLLER
LASER CONTROLS
SYNCHRONISATION
POCKELS CELL
AMPLIFIER
PC START SYNCHRONISATION
30 V
SCR BIAS
PC HV
J K LASER 2000
PD
SF
L
OM
R
IE
IE
PC
RM
A1
A2
A3
BE
TO BUBBLE CHAMBER

Fig. 5

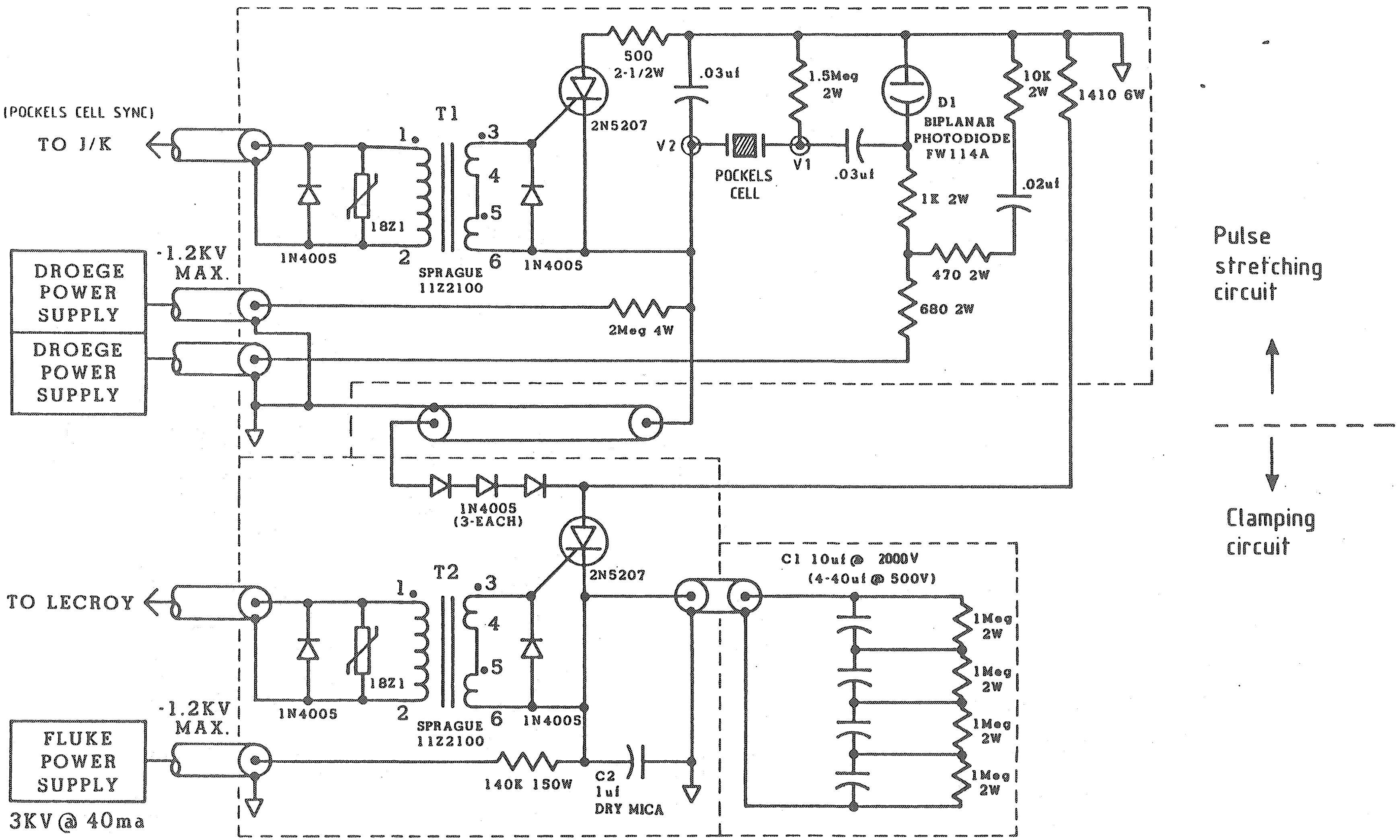
(POCKELS CELL SYNC)
TO J/K
T1
1
2
.3
4
.5
6
1N4005
18Z1
SPRAGUE 11Z2100
1N4005
2N5207
500 2-1/2W
.03uf
V2
POCKELS CELL
1.5Meg 2W
V1
.03uf
D1 BIPLANAR PHOTODIODE FW114A
10K 2W
1410 6W
.02uf
1K 2W
470 2W
680 2W
2Meg 4W
DROEGE POWER SUPPLY
DROEGE POWER SUPPLY
-1.2KV MAX.
Pulse stretching circuit
Clamping circuit
1N4005 (3-EACH)
2N5207
T2
TO LECROY
1
2
.3
4
.5
6
18Z1
1N4005
SPRAGUE 11Z2100
1N4005
C1 10uf@ 2000V (4-40uf@ 500V)
1Meg 2W
1Meg 2W
1Meg 2W
1Meg 2W
-1.2KV MAX.
FLUKE POWER SUPPLY
3KV@ 40ma
140K 150W
C2 1uf DRY MICA

Fig. 6

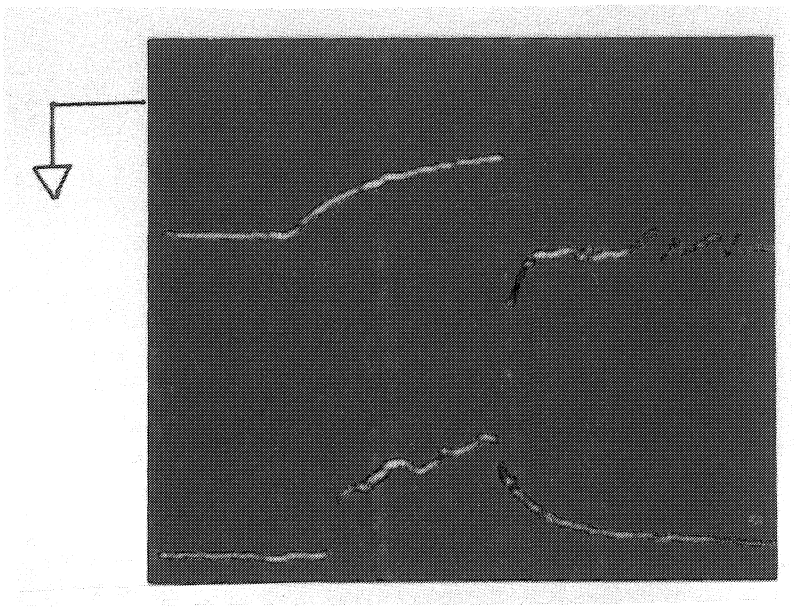

Fig. 7

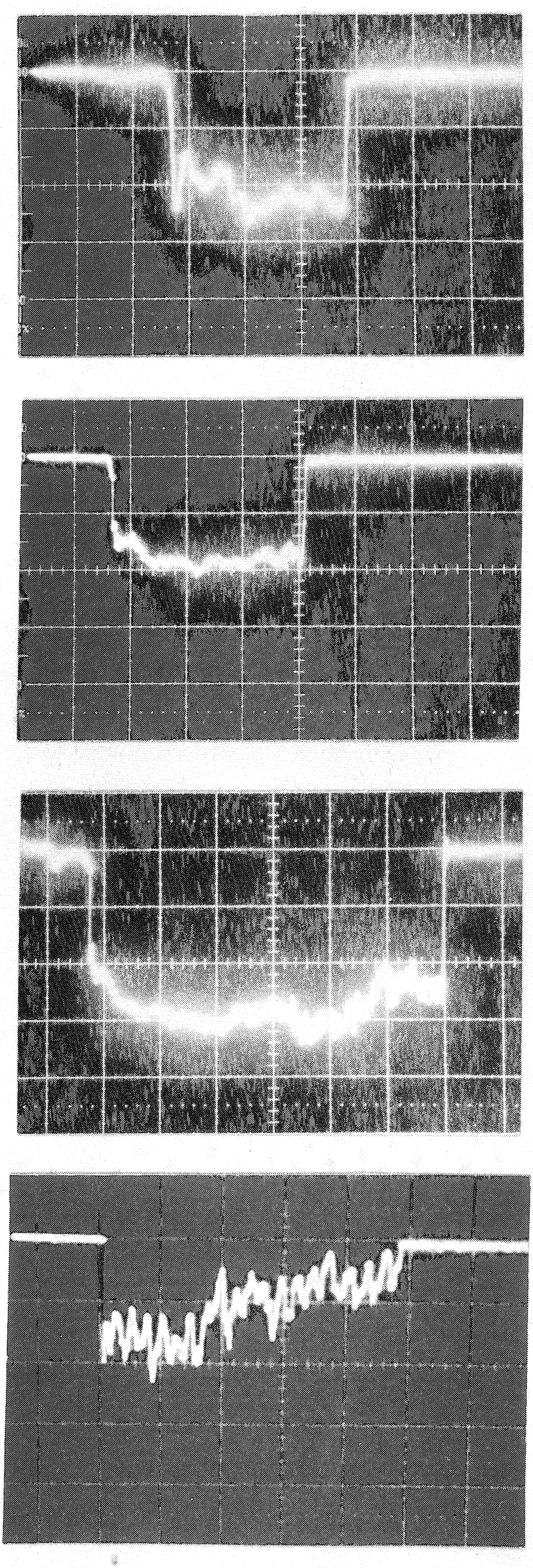

(a)

(b)

(c)

(d)

Fig. 8

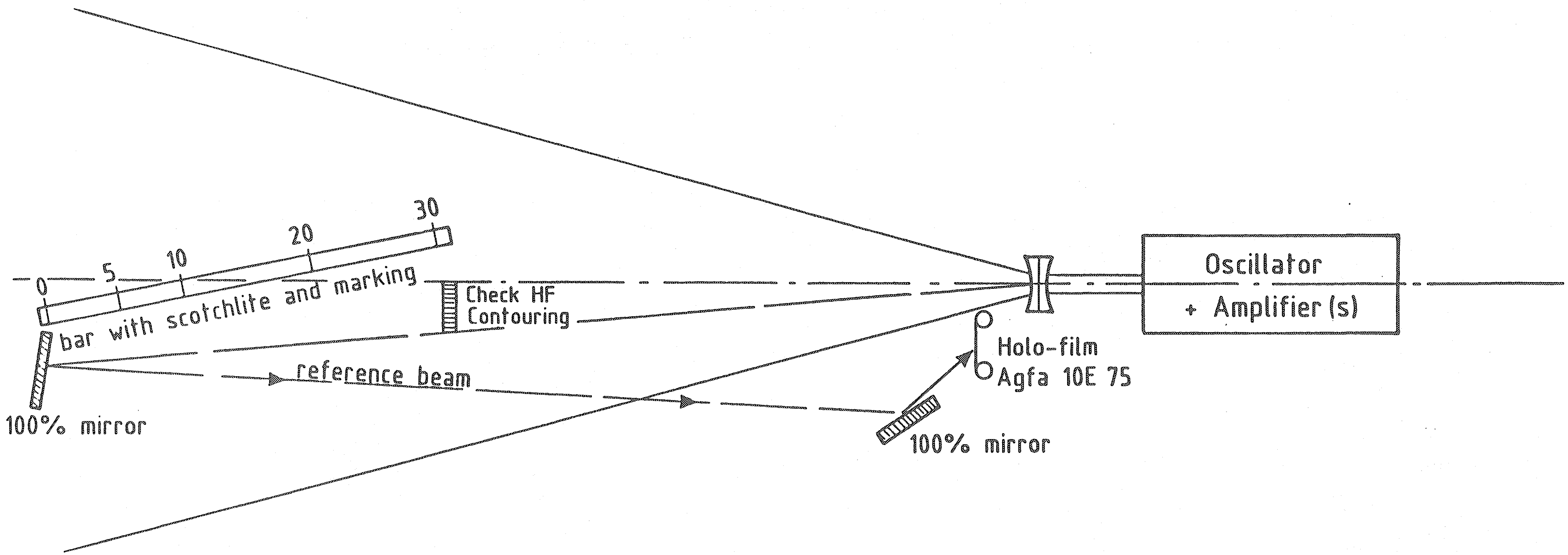
Oscillator
+ Amplifier (s)
Holo-film
Agfa 10E 75
100% mirror
Check HF
Contouring
0
5
10
20
30
bar with scotchlite and marking
reference beam
100% mirror

Fig. 9

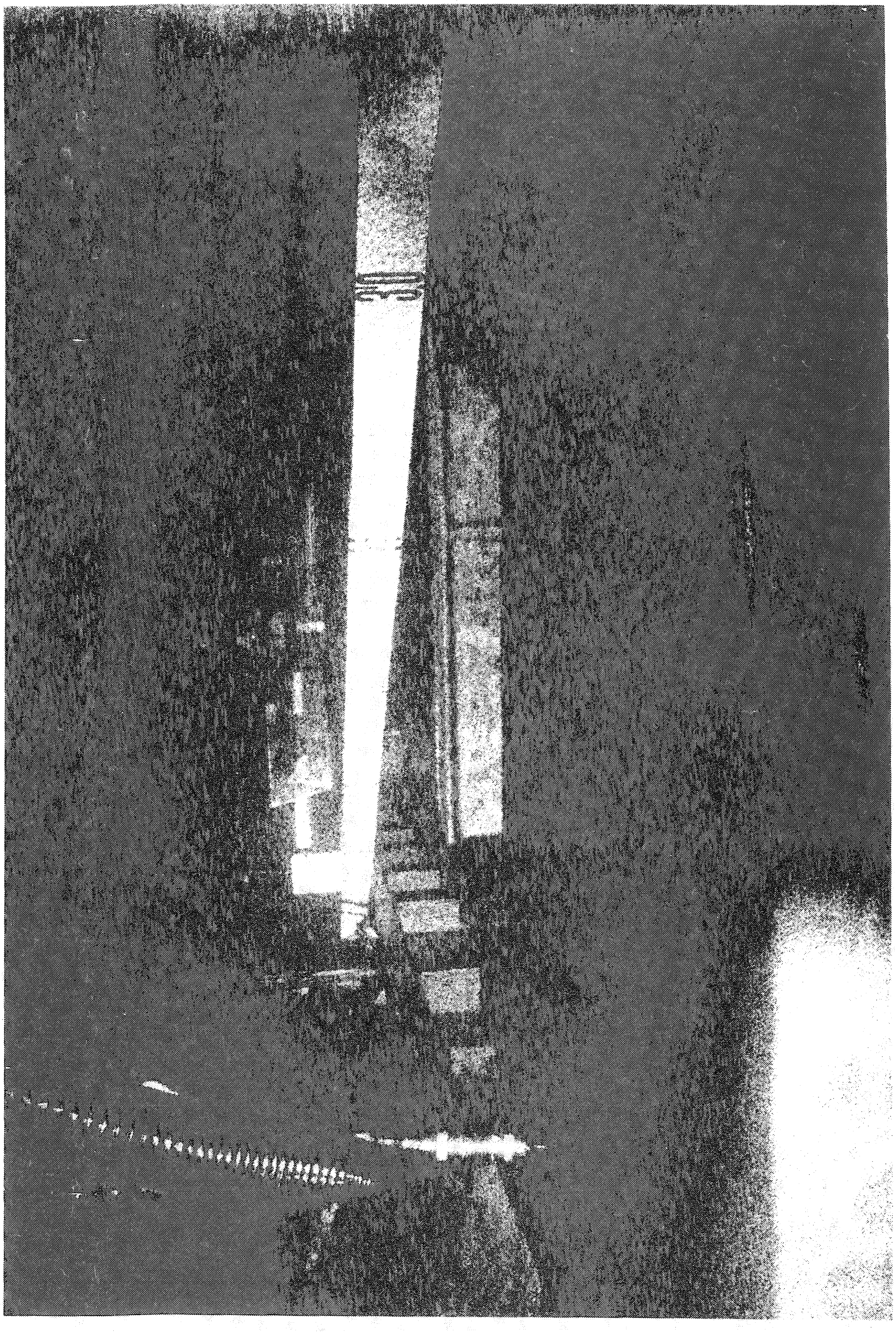

Fig. 10(a)

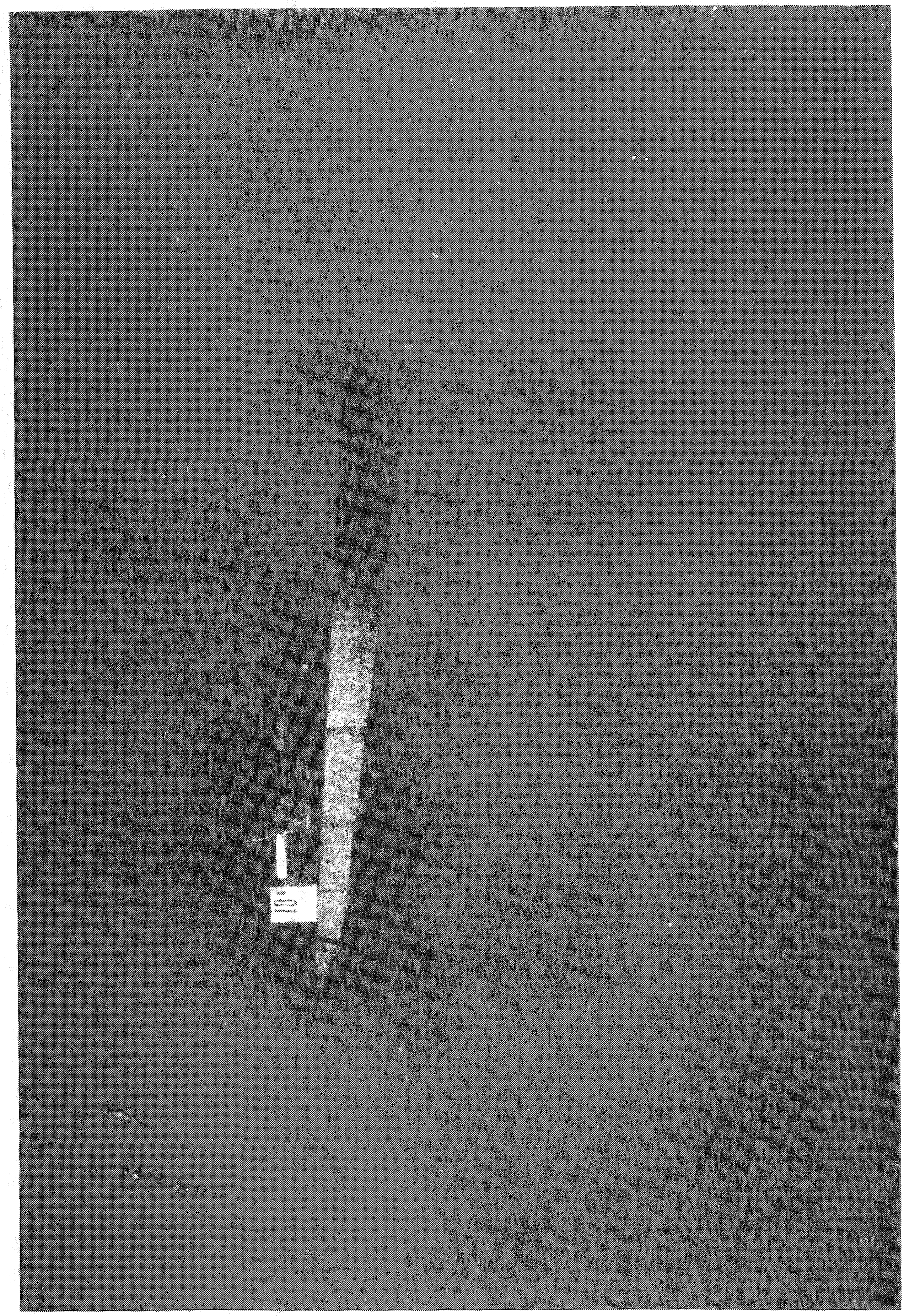

Fig. 10(b)

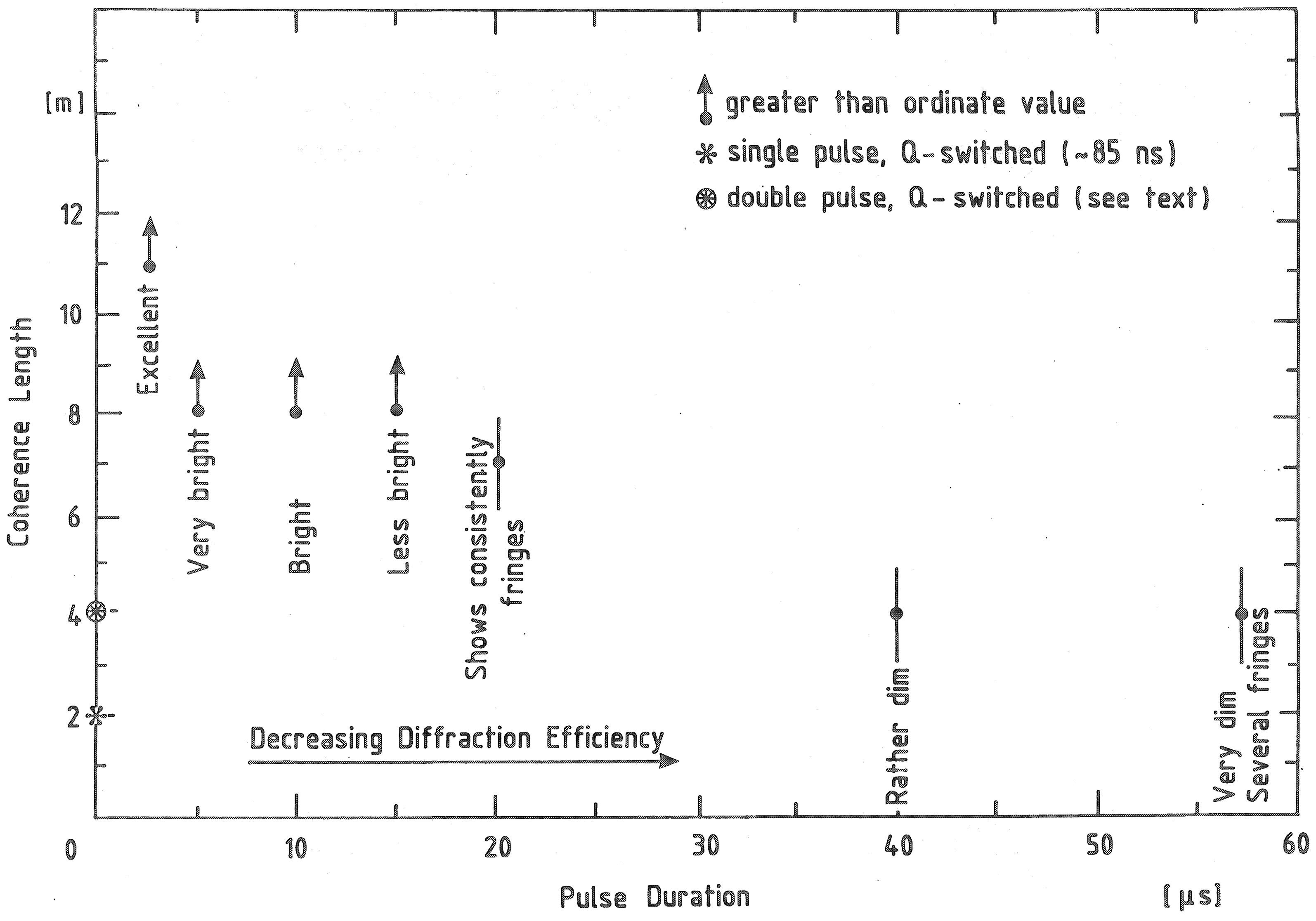
↑● greater than ordinate value
* single pulse, Q-switched (~85 ns)
⊛ double pulse, Q-switched (see text)
Coherence Length
[m]
12
10
8
6
4
2
0
10
20
30
40
50
60
Pulse Duration
[µs]
Excellent
Very bright
Bright
Less bright
Shows consistently fringes
Rather dim
Very dim
Several fringes
Decreasing Diffraction Efficiency

Fig. 11

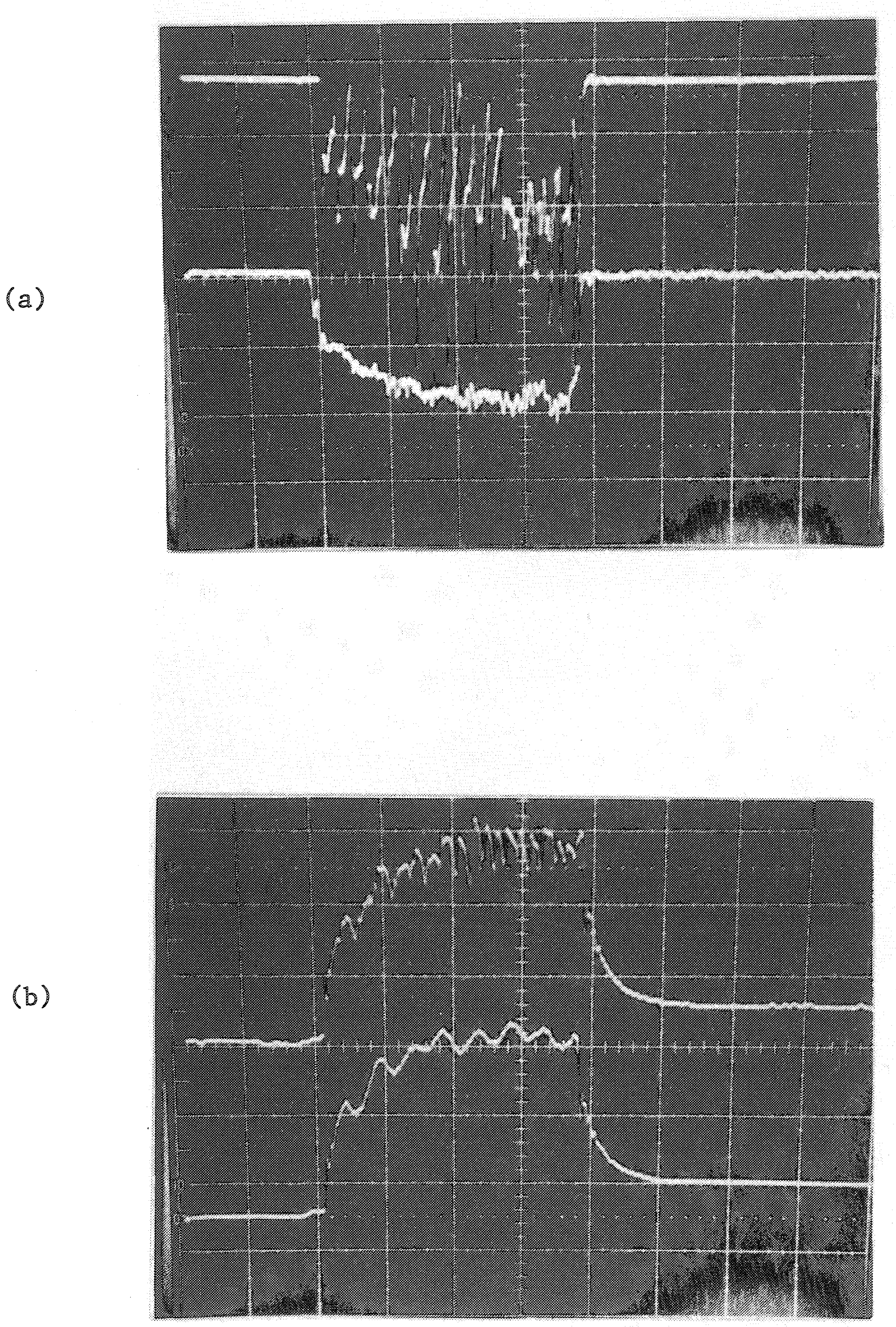

Fig. 12