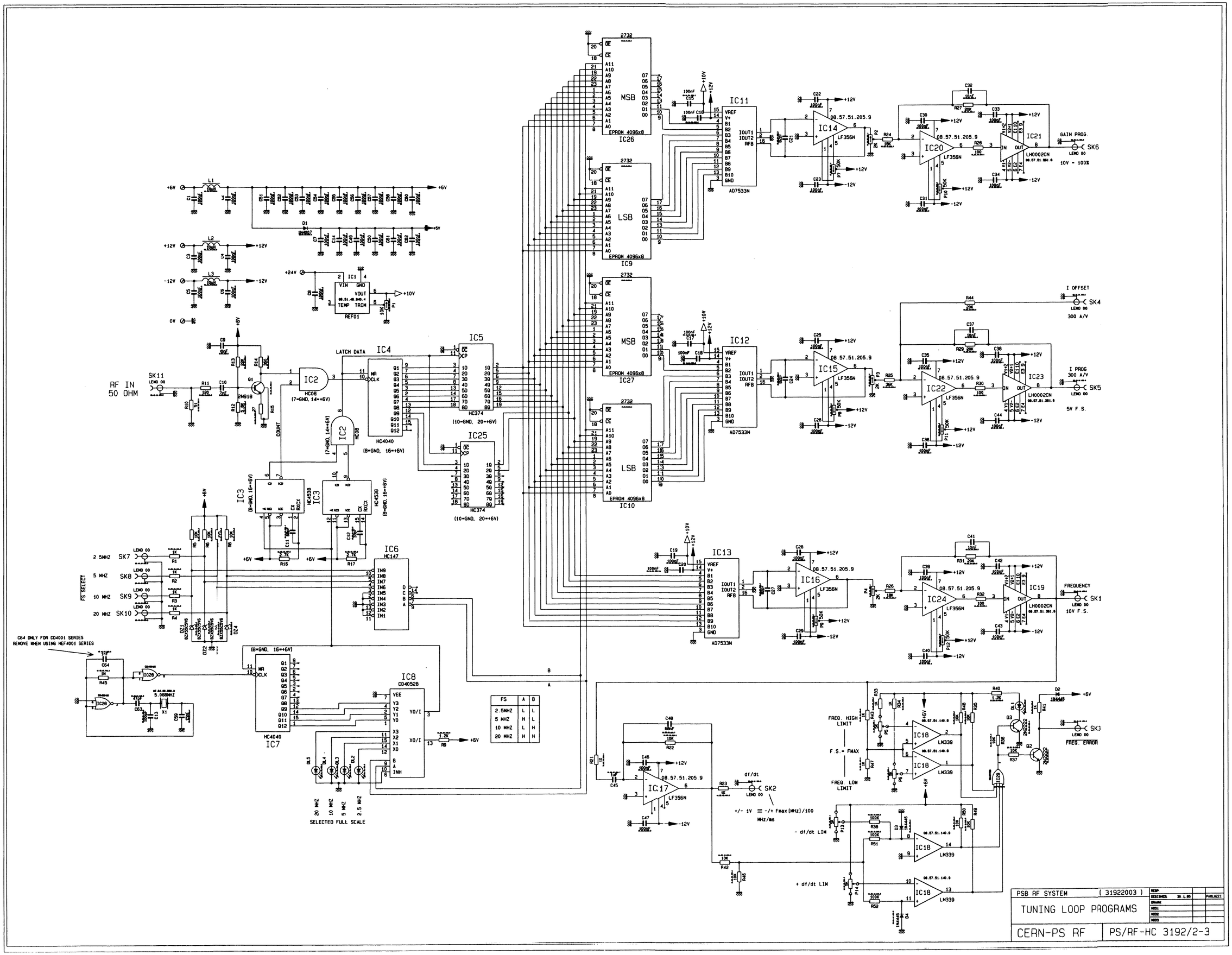

FS	A	B
2.5MHZ	L	L
5 MHZ	H	L
10 MHZ	L	H
20 MHZ	H	H

PSB RF SYSTEM (31922003)

TUNING LOOP PROGRAMS

CERN-PS RF

PS/RF-HC 3192/2-3